S

ITEM # GEN7500DF-SS
7500 SURGE WATTS / 6000 RUNNING WATTS
DUAL FUEL LPG LIQUID PROPANE & GASOLINE
PORTABLE GENERATOR
INSTRUCTION MANUAL

READ ALL INSTRUCTIONS AND WARNINGS BEFORE USING THIS PRODUCT.

This manual provides important information on proper operation & maintenance. Every effort has been made to ensure the accuracy of this manual. These instructions are not meant to cover every possible condition and situation that may occur. We reserve the right to change this product at any time without prior notice.

IF THERE IS ANY QUESTION ABOUT A CONDITION BEING SAFE OR UNSAFE,

DO NOT OPERATE THIS PRODUCT!

Visit our website for more information: www.buffalotools.com

HAVE QUESTIONS OR PROBLEMS? CONTACT CUSTOMER SERVICE

If you experience a problem, have questions or need parts for this product, call Customer Service at **1-866-460-9436, Monday-Friday, 8 AM - 4 PM Central Time**. A copy of the sales receipt is required.

FOR CONSUMER USE ONLY – NOT FOR PROFESSIONAL USE.

KEEP THIS MANUAL, SALES RECEIPT & APPLICABLE WARRANTY FOR FUTURE REFERENCE.

⚠ DANGER

SEEK THE ADVISE OF A LICENSED ELECTRICIAN FOR 120V / 240V WIRING

ITEM # GEN7500DF 7500 Surge Watts / 6000 Running Watts

This unit is a Dual Fuel LPG or Gasoline Fuel powered generator.

FEATURES:

• 7500 Surge Output / 6000 Running Watts *
• 120/240 Volt Operation
• 15 HP Engine, 4 Stroke
• Displacement (CC): 420cc
• AVR Automatic Voltage Regulation
• Low Oil Shut Off
• UL Listed Electrical Components
• Engine Shut Off Switch
• Circuit Breaker & Power Outlets
• Spark Plug Model F6TC
• 1-12V DC Outlet
• 4-120V GFCI Outlets
• 1-120/240V Outlet
• 1-120V RV Outlet
• 6.2 Gallons Max Capacity Gasoline Fuel Tank
• Complies with EPA emissions
• Decibel Rating < 80 db
• Mobility Kit: Included
• Run time = 9 hrs @ 50% load Gasoline
• Run time = 5 hrs @ 50% load LPG with 20 Gallon tank *
• Battery Not Included (see page 9 for additional details)
(Use a 12 Volt motorcycle battery no larger than 6" L x 3.8" H x 3.8" W
CCA (Cold Cranking Amps): 130 Min CCA. Comparable model: 12 Volt 12 Ah Sealed Lead Acid Model # XTAZ10S
• Fuel type - Liquid Propane Gas (also commonly referred to as LP, LPG and Propane) Or Unleaded Gasoline
• High Altitude Use: This generator is not recommended for high altitude use above 3,000 feet.
• If you are using a generator at 3,000 feet above sea level, the generator may not function properly because of air flow getting through the carburetor.
• Propane Tank Not Included
• If you want to use a propane tank larger than 20 lbs, call Customer Service for details at 866-460-9436.
*** SURGE WATTS / RUNNING WATTS MAY BE REDUCED BY 10% WHEN USING PROPANE FUEL VS USING GASOLINE.**

2 YEAR LIMITED EMISSION-RELATED WARRANTY

THIS ENGINE MEETS U.S. EPA EMISSION STANDARDS UNDER 40 CFR 1054.625 .The emission-related limited warranty is valid for two (2) years. Keep the purchase receipt and mail in the product registration card for proof of purchase. Buffalo Corp limits emission-related warranty repairs to authorized service centers for owners located within 100 miles of an authorized service center. For owners located more than 100 miles from an authorized service center, Buffalo Corp will, in its sole discretion, either pay for shipping costs to and from an authorized service center, provide for a service technician to come to the owner to make the warranty repair, or pay for the repair to be made at a local non-authorized service center. The provisions of this paragraph apply only for the contiguous states, excluding the states with high-altitude areas identified in 40 CFR part 1068, Appendix III.
To exercise this warranty, DO NOT RETURN TO RETAILER. Instead, call Customer Service toll free at 1-866-460-9436 (email address info@buffalotools.com) and you will be instructed on where to take the engine for warranty service. Take the generator and proof of purchase (your receipt) to the repair facility recommended by the Customer Service Representative. The warranty does not extend to generators damaged or affected by fuel contamination, accidents, neglect, misuse, unauthorized alterations, use in an application for which the product was not designed and any other modifications or abuse.

1 YEAR LIMITED WARRANTY **(30 Day Limited Warranty for Commercial and Rental Purpose)**

Generators are warranted to be free from defects in materials and workmanship for a period of 1 YEAR from date of original purchase. Buffalo Corp. is not liable for any indirect, incidental or consequential damages from the sale or use of this product. Any implied warranties are limited to 1 YEAR as stated, or as otherwise stated, in this written limited warranty. Some states do not allow the exclusion or limitation of incidental or consequential damages. Some states do not allow limitation on the length of an implied warranty. Buffalo Corp will repair or replace, at its discretion, any part that is proven to be defective in materials or workmanship under normal use during the 1 YEAR warranty period. Warranty repairs or replacements will be made without charge for parts or labor. Parts replaced during warranty repairs will be considered as part of the original product and will have the same warranty period as the original product. This warranty gives you specific legal rights, and you may have other rights that vary state to state

TABLE OF CONTENTS

RECOGNIZE SAFETY SYMBOLS, WORDS AND LABELS....4

PACKAGE CONTENTS
- PACKAGE CONTENTS....9
- COMPONENTS....10

PREPARING THE GENERATOR FOR USE....11
- Using This Generator For The First Time....11
  - Step 1 – Add Oil....11
  - Step 2 – Connect Fuel....12
  - Step 3 – Ground The Generator....13
- Subsequent Use Of This Generator....13
  - Step 1 – Verify Oil Level....13
  - Step 3 – Ground The Generator....14

STARTING THE GENERATOR....14

USING THE GENERATOR....15
- AC Usage....15
- DC Usage....17

STOPPING THE GENERATOR....18

MAINTENANCE/CARE....18
- Recommended Maintenance Schedule....18
- Cleaning The Generator....18
- Checking The Oil Level....19
- Changing/Adding Oil....19
- Air Filter Maintenance....20
- Spark Plug Maintenance....20

STORAGE/TRANSPORT PROCEDURES....21

TROUBLESHOOTING....22

SPECIFICATIONS....23

PARTS DIAGRAM....24

WIRE DIAGRAM....33

PORTABILITY KIT INSTALLATION....34

EMISSION CONTROL SYSTEM WARRANTY....35

RECOGNIZE SAFETY SYMBOLS, WORDS AND LABELS

What You Need to Know About Safety Instructions

Warning and Important Safety Instructions appearing in this manual are not meant to cover all possible conditions and situations that may occur. Common sense, caution and care must be exercised when operating or cleaning tools and equipment.

Always contact your dealer, distributor, service agent or manufacturer about problems or conditions you do not understand.

This is the safety alert symbol. It is used to alert you to potential personal injury hazards. Obey all safety messages that follow this symbol to avoid possible injury or death.

⚠ DANGER — DANGER indicates an imminently hazardous situation which, if not avoided, will result in death or serious injury.

⚠ WARNING — WARNING indicates a potentially hazardous situation which, if not avoided, could result in death or serious injury.

⚠ CAUTION — CAUTION indicates a potentially hazardous situation which, if not avoided, may result in minor or moderate injury.

CAUTION — CAUTION used without the safety alert symbol indicates a potentially hazardous situation which, if not avoided, may result in property damage.

⚠ DANGER

SEEK THE ADVISE OF A LICENSED ELECTRICIAN FOR 120V / 240V WIRING

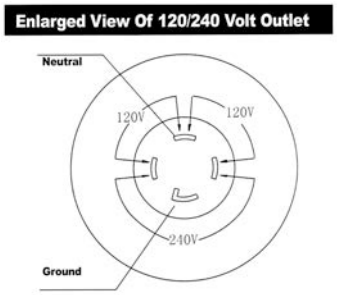

High Altitude Use:
This generator is not recommended for high altitude use above 3,000 feet.

Legal Requirements:
Federal and/or State Occupational Safety and Health Administration (OSHA) regulations, local codes, and/or ordinances may apply to the intended use of this generator. Consult a qualified electrician, electrical inspector, and/or the local agency having jurisdiction. Some areas require generators to be registered with local utility companies. Additional regulations may apply if this generator will be used at a construction site.

IMPORTANT SAFETY INSTRUCTIONS

STOP!

Before using this generator and if you have any questions regarding the hazard and safety notices listed in this manual and/or on this generator, call 1-866-460-9436, Monday - Friday, 8 AM - 4 PM Central Time.

⚠ DANGER

Carbon Monoxide Gas: When in operation, the exhaust from this generator contains poisonous carbon monoxide gas. Carbon monoxide gas is both odorless and colorless AND may be present even if you do not see or smell gas. Breathing this poison gas can lead to headaches, dizziness, drowsiness, loss of consciousness and eventually death.

• Use this generator ONLY outdoors in non-confined areas.
• Keep at least several feet of clearance on all sides to allow proper ventilation for this generator.

⚠ WARNING

Propane (LPG): This generator may emit highly flammable and explosive vapors, which can cause severe burns or even death. A nearby open flame can lead to an explosion even if not directly in contact the fuel.

• Do not operate this generator near open flame.
• Always operate this generator on a firm, level surface.

This fuel is highly flammable and explosive. Handling fuel can result in serious injury or burns.

• Before starting the generator, inspect your LPG tank valve for damage or leaks, attach only approved tanks that have been properly filled by an approved station. DO NOT light or smoke cigarettes.
Replace the hose at the first sign of a leak or if age-cracking becomes apparent.
• Always handle propane fuel and generator outdoors.
• Before transporting, turn the fuel valve to the "off" position and disconnect the spark plug.

⚠ DANGER

Powerful Voltage: This generator produces powerful voltage, which can result in electrocution.

• ALWAYS ground this generator before using it. (See “Ground the Generator” section in this manual).
• Only electrical devices should be plugged into this generator, either directly or with an extension cord. NEVER connect a building electrical system to this generator without a qualified electrician. ***Doing so voids your warranty.*** Such connections must isolate generator power from utility power and comply with local electrical laws and codes. Failure to comply can create a back feed into utility lines creating an electrocution hazard, which may result in serious injury or death to utility workers. Such a back feed may cause this generator to explode, burn and create fires when utility power is restored.
• Do not use this generator in wet conditions (rain, snow, active sprinkler system, wet hands, etc.). Always keep this generator dry and operate it with dry hands.
• Do not touch bare wires or outlets (receptacles).
• Do not allow children or non-qualified persons to operate this generator.

⚠ DANGER

High Temperatures: This generator produces heat when in operation. Temperatures near the exhaust can exceed 150 Degrees Fahrenheit (65 Degrees Celsius).

• Do not touch hot surfaces. Observe all warning placards on this generator denoting hot surfaces.
• Allow this generator to cool for several minutes after use before touching the engine, muffler or other areas that are hot during operation and before storing indoors.
• Hot exhaust may ignite some materials. Keep flammable materials away from this generator.
• Keep at least several feet of clearance on all sides of this generator during operation. Do not enclose this generator in any structure.

⚠ WARNING

Usage: Avoid the use of extension cords if possible. If you choose to use them, be sure they are sized adequately to handle the flow of electricity. An undersized cord can overheat, short out and cause a fire.

⚠ CAUTION

Usage: Misuse of this generator can damage it or shorten its life.

- Use this generator only for its intended purpose.
- Operate this generator only on a dry, level surface.
- Allow this generator to run for several minutes before connecting any electrical devices.
- Promptly turn off any malfunctioning devices and disconnect them.
- Do not operate an excessive number of electrical devices in excess of the wattage capacity of this generator.
- Do not turn on electrical devices until *after* they are connected to this generator.
- Turn off all connected electrical devices before stopping this generator.

⚠ DANGER

Flammable liquid gas under pressure. Can form explosive mixtures with air. May cause frostbite. **In Case Of Inhalation**: Persons suffering from lack of oxygen should be removed to fresh air. If victim is not breathing, administer artificial respiration. If breathing is difficult, administer oxygen. Obtain prompt medical attention. **In Case Of Eye Contact**: Contact with liquid or cold vapor can cause freezing of tissue. Gently flush eyes with lukewarm water. Obtain medical attention immediately. **In Case Of Skin Contac**t: Contact with liquid or cold vapor can cause frostbite. Immediately warm affected area with lukewarm water not to exceed 105°F (40°C). **Fire And Explosion Hazards:** Propane is easily ignited. It is heavier than air, therefore, it may collect in low areas or travel along the ground where an ignition source may be present. Pressure in a container can build up due to heat, and it may rupture if pressure relief devices should fail to function. **Storage:** Cylinders should be stored upright with valve protection cap in place and firmly secured to prevent falling or being knocked over. Protect cylinders from physical damage; do not drag, roll, slide or drop. Use a suitable hand truck for cylinder movement. Post "No Smoking or Open Flames" signs in the storage areas. There should be no sources of ignition. All electrical equipment should be explosion proof in the storage and use areas. Storage areas must meet national electric codes for class 1 hazardous areas.

⚠ DANGER

Propane smells like rotten eggs, a skunk's spray, or a dead animal. IF YOU SMELL GAS- NO FLAMES OR SPARKS! Immediately put out all smoking materials and other open flames. Do not operate lights, appliances, telephones, or cell phones. - Flames or sparks from these sources can trigger an explosion or a fire.

WHAT IS CARBON MONOXIDE (CO)?
You can't taste or smell CO, but it is a very dangerous gas. High levels of CO can come from appliances that are not operating correctly, or from a venting system or chimney that becomes blocked. CO CAN BE DEADLY! High levels of CO can make you dizzy or sick. In extreme cases, CO can cause brain damage or death.
Symptoms of CO poisoning include: headache, dizziness, fatigue, shortness of breath, and nausea.

IF YOU SUSPECT CO IS PRESENT, ACT IMMEDIATELY!
1. If you or a family member shows physical symptoms of CO poisoning, get everyone out of the building and call 911 or your local fire department.
2. If it is safe to do so, open windows to allow entry of fresh air, and turn off any appliances you suspect may be releasing CO.
3. If no one has symptoms, but you suspect that CO is present, call your propane retailer or a qualified service technician to check CO levels and your propane equipment.

⚠ WARNING

Usage: Consult a physician(s) before using this generator if using a pacemaker. Electromagnetic fields in close proximity to a heart pacemaker could cause a pacemaker to malfunction or fail. Caution is necessary when near the engine's recoil starter.

⚠ CAUTION

Usage: Prolonged exposure to high noise levels can be hazardous to hearing. Always wear ANSI-approved hearing protection when operating or working around the generator when it is running.

CAUTION

Usage: This generator is not intended to power sensitive electronic equipment such as TVs, DVD players, stereos, desktop computers or laptop computers without the use of an appropriate line conditioner and/or surge protector (both not included).
Sensitive electronic equipment should be operated on approved inverter type generators or pure sine wave generators. For additional information consult the devices operation manual or call customer service at 1-866-460-9436 Monday - Friday, 8 AM - 4 PM Central Time.

⚠ WARNING

THIS GENERATOR PRODUCES HEAT WHEN RUNNING. TEMPERATURES NEAR EXHAUST CAN EXCEED 150°F. (65° C) DO NOT TOUCH HOT SURFACES. PAY ATTENTION TO WARNING LABELS ON THE GENERATOR DENOTING HOT PARTS OF THE MACHINE. ALLOW GENERATOR TO COOL AFTER USE BEFORE TOUCHING ENGINE OR AREAS WHICH HEAT DURING USE.

⚠WARNING

GASOLINE IS HIGHLY FLAMMABLE AND EXPLOSIVE. YOU COULD BE BURNED OR SERIOUSLY INJURED IF THE GASOLINE IS IGNITED. Before refueling, stop the engine and keep heat, sparks and flame away. Handle fuel only outdoors. Do not fill the fuel tank above the upper limit line. Wipe up spills immediately.

⚠ WARNING

EXHAUST CONTAINS POISONOUS CARBON MONOXIDE GAS THAT CAN BUILD UP TO DANGEROUS LEVELS IN CLOSED AREAS. BREATHING CARBON MONOXIDE CAN CAUSE UNCONSCIOUSNESS OR DEATH. Never run the generator in a closed or even partly closed area where people may be present.

⚠ WARNING

THE GENERATOR IS A POTENTIAL SOURCE OF ELECTRICAL SHOCK IF NOT KEPT DRY. Do not expose the generator to moisture, rain or snow. Do not operate the generator with wet hands. READ OWNER'S MANUAL CAREFULLY BEFORE OPERATION.

⚠ DANGER

IMPROPER CONNECTIONS TO A BUILDING CAN ALLOW ELECTRICAL CURRENT TO BACKFEED INTO UTILITY LINES, CREATING AN ELECTROCUTION HAZARD. Connections to a building must isolate generator power from utility power and comply with all applicable laws and electrical codes.

⚠WARNING

Propane smells like rotten eggs, a skunk's spray, or a dead animal. IF YOU SMELL GAS- NO FLAMES OR SPARKS! Immediately put out all smoking materials and other open flames. Do not operate lights, appliances, telephones, or cell phones. Flames or sparks from these sources can trigger an explosion or a fire.

In addition to the previously described safety information, familiarize yourself with all safety and hazard notices on this generator.

⚠ DANGER POISONOUS GAS

Generator exhaust contains toxic carbon monoxide gas. Breathing exhaust can cause loss of consciousness and shortness of breath. NEVER operate generator in poorly ventilated areas.

⚠ WARNING

Risk of electric shock. Do not remove cover. No user serviceable parts inside. Refer servicing to qualified service personnel.

⚠ WARNING! RISK OF ELECTRIC SHOCK

This generator produces high voltage.
Always ground properly before use.
Do not connect to any building electrical system.
Never use in rainy or wet conditions.
Never touch bare wires or receptacles.
Never allow children or non-qualified person to operate.

⚠WARNING

Propane smells like rotten eggs, a skunk's spray, or a dead animal. IF YOU SMELL GAS- NO FLAMES OR SPARKS! Immediately put out all smoking materials and other open flames. Do not operate lights, appliances, telephones, or cell phones. Flames or sparks from these sources can trigger an explosion or a fire.

⚠ CAUTION! HOT EXHAUST

DO NOT TOUCH

CAUTION!
HIGH TEMPERATURE
DO NOT TOUCH

⚠ DANGER

Using a generator indoors CAN KILL YOU IN MINUTES.

Generator exhaust contains carbon monoxide. This is a poison you cannot see or smell.

NEVER use inside a home or garage. EVEN IF doors and windows are open.

Only use OUTSIDE and far away from windows, doors, and vents.

PACKAGE CONTENTS

The following items are supplied with this Item # GEN7500DF-SS Portable LP & Gasoline Generator. Verify that all items are included.

STOP!

If there are missing items, **call 1-866-460-9436, Monday - Friday, 8 AM - 4 PM Central Time** for customer service.

Item List:	
	Set of 2 DC connector wires for charging 12 Volt automotive-type batteries
	Spark plug wrench

	5 Ft. Regulator Hose Kit (YOU MUST USE THE SUPPLIED REGULATOR FOR SAFE OPERATION)

Battery Requirements

Batteries are available at your
local dealer. See below requirements:
(Use a 12 Volt motorcycle battery no larger than
6" L x 3.8" H x 3.8" W
CCA (Cold Cranking Amps): 130 Min CCA.
Comparable model: 12 Volt 12 Ah Sealed Lead Acid
Model # XTAZ10S OR # CYLAZ10SXTA battery)

GENERATOR COMPONENTS

Observe the locations and functions of the various components and controls of this generator.

LP Gas Inlet
(Figure A)

Gas Fuel Petcock
(Figure B)

Fuel On

Fuel Off

Choke Open (Figure C)

Choke Closed (Figure C)

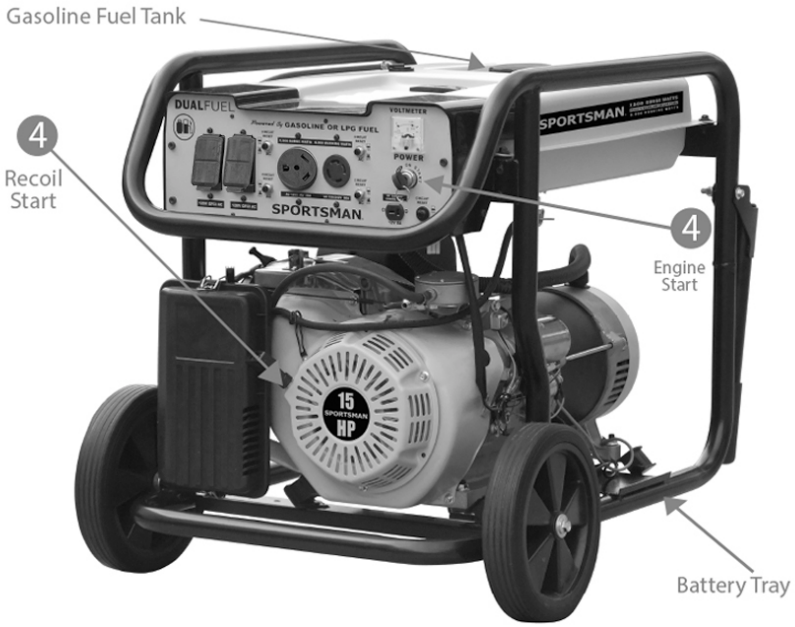

WARNING:
YOU MUST USE THE SUPPLIED REGULATOR FOR SAFE OPERATION

To prevent electrical shock from faulty appliances, the generator should be grounded. Connect a length of heavy wire between the ground terminal and the ground source.

Consult with a qualified electrician to ensure compliance with local electrical codes.

ATTENTION:
The Air-fuel Mixer is not adjustable. Tampering with the governor can damage your generator and electrical devices, and will void your warranty.

PREPARING THE GENERATOR FOR USE

Using this Generator for the First-Time

STOP! **CAUTION**

The following section describes the required steps for preparing this generator for the first use. Failure to correctly perform these steps can damage this generator and/or shorten its life. If still unsure about how to perform any of these steps after reading this section, call 1-866-460-9436 Monday - Friday, 8 AM - 4 PM Central Time for customer service.

If this generator is being used for the first time, the following few steps are required to prepare it for operation:

Step 1 - Add Oil

This generator requires engine oil to function. Engine oil is a major factor affecting engine performance and service life. When new from the package, this generator contains no oil in the engine crankcase. The correct quantity of oil is equal to the oil capacity of the engine crankcase and is 38 fluid oz. Add the correct quantity of oil before operating this generator for the first time. When replenishing oil for subsequent use of this generator, always determine that this generator has the correct quantity of oil.

Item # GEN7500DF-SS Oil Capacity	38 ounces
Item # GEN7500DF-SS Oil Type Recommended	High Detergent Motor Oil, SAE10W-30

To add oil:

1. Confirm that this generator is on a level surface.
2. Unscrew the oil filler/dipstick cap from the engine as illustrated in Figure 1.
3. Using a funnel, add high detergent motor oil to fill the engine crankcase to the correct quantity. SAE10W-30 oil is recommended for general, all-temperature use. **When the engine crankcase is full, the oil level should reach all the way up to the threads** as illustrated in Figure 2.
4. Replace the oil filler/dipstick cap.

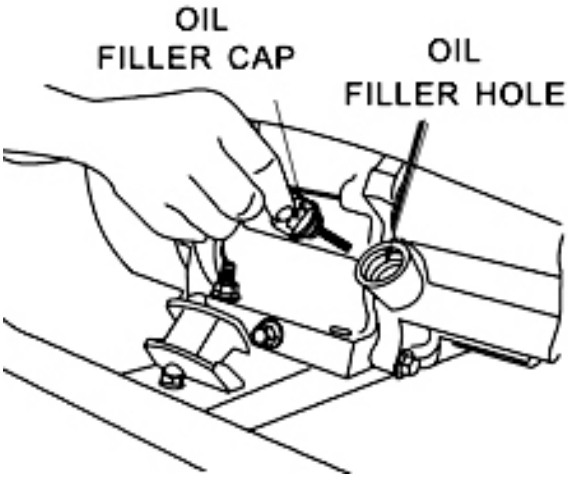

Figure 1 - Unscrew the Oil Cap

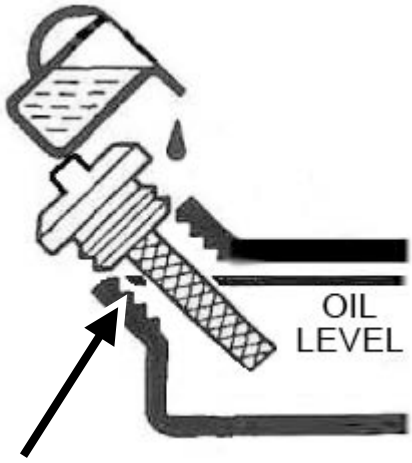

Figure 2 - Add Oil To TOP Of Threads

Step 2 – Connect Fuel

⚠ WARNING

Sulfur, water, dust, etc. are harmful for engine. If the gas supply source (LPG) contains these harmful elements, user must use filter to remove sulfur, water etc. and clean gas. Otherwise, the engine service lifetime will be shortened.

Choose either LPG or Gasoline fuel. If using LPG, first connect the regulator that was included with the generator to Propane Fuel Tank, then connect the other end to the Gas Inlet. (Fig A) Make sure the LPG cylinder is vertical and securely positioned

If using gasoline fuel, add Unleaded gasoline only with an octane rating of 87 or higher.
Maximum Capacity: 6.2 Gallons

Pre-Operation Check List

Step 1 Check that the gas supply source is in good condition. Check that the gas inlet connection is tightly fixed and not leaking.

Step 2 CHOKE VALVE GRIP is at CHOKE (CLOSE) position. The generator may be hard to start if CHOKE VALVE GRIP is at RUN (OPEN) position.

Step 3 Check if engine oil is full.

Step 4 Make sure GROUND TERMINAL is properly grounded.

Step 5 AC OUTPUT no load connected.
Disconnect all electrical loads from the generator set before starting the engine. The generator may be hard to start if a load is connected.

Step 6 DC OUTPUT no load connected.

LP Gas Inlet
(Figure A)

Gas Fuel Petcock
(Figure B)

Fuel On

Fuel Off

Choke Open (Figure C)

Choke Closed (Figure C)

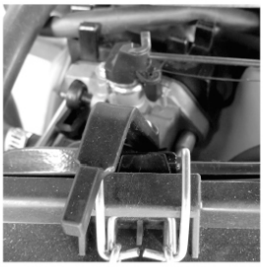

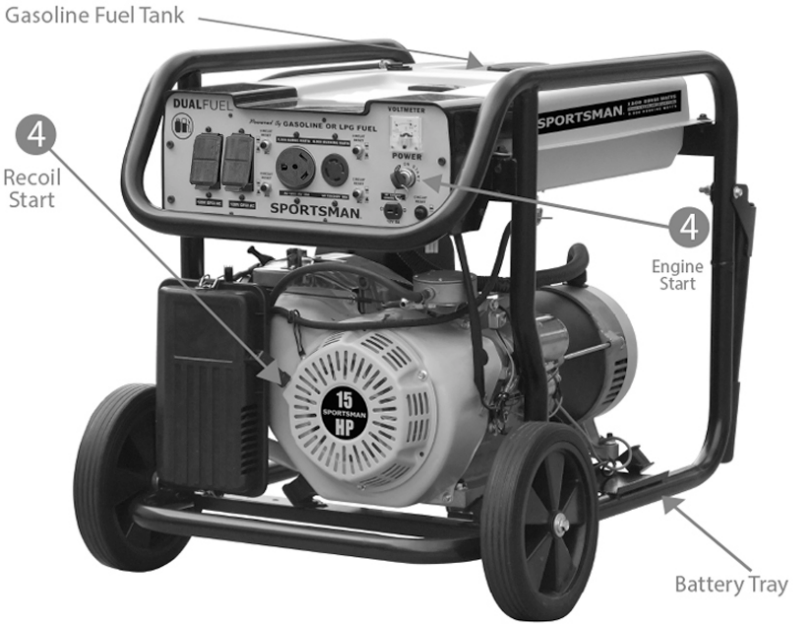

Step 3 - Ground the Generator

⚠ WARNING

Failure to properly ground this generator can result in electrocution.

Ground this generator by tightening the grounding nut against a grounding wire as illustrated in Figure 3. A No. 12 AWG (American Wire Gauge) stranded copper wire is generally an acceptable grounding wire. The other end of this grounding wire should be connected to a copper or brass grounding rod that is driven into the earth.

Grounding codes can vary by location. Contact a local electrician for information on grounding regulations for your area.

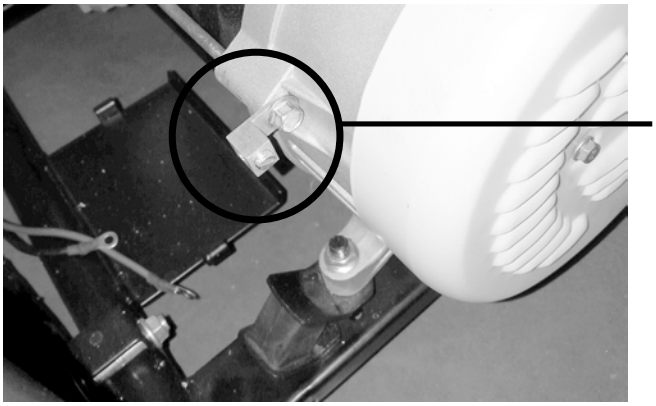

Figure 3 - Attaching the Grounding Wire to this Generator

Subsequent Use of this Generator

For subsequent uses of this generator after the first use, certain steps still must be completed to prepare it for operation.

IMPORTANT: Be familiar with the procedures described in the previous section titled "Using the Generator for the First Time" of this manual. If not, review this section now.

Step 1 - Verify Oil Level

Even though this generator is equipped with an automatic shutoff to protect it from damage due to low oil, it is important to check the oil level in the engine crankcase before each use to ensure that there is sufficient quantity.

1. Verify that this generator is on a level surface.
2. Unscrew the oil filler/dipstick cap from the engine.
3. With a dry cloth, wipe the oil off of the dipstick that is located on the inside of the cap.
4. Fully insert the dipstick without screwing the filler/dipstick cap and then remove again. There should be oil on the dipstick. If there is no oil on the dipstick, or oil is visible only at the very end of the dipstick, add oil until the engine crankcase is filled. (See "Changing/Adding Oil" in the "Maintenance/Care" section of this manual).
5. Confirm that the oil filler/dipstick cap is properly screwed in place when finished verifying the oil level.

NOTE: The oil capacity for this Generator is 38 oz (US).

Item # GEN7500DF-SS Oil Capacity	38 ounces
Item # GEN7500DF-SS Oil Type Recommended	High Detergent Motor Oil, SAE10W-30

Step 3 - Ground the Generator

⚠ WARNING

Failure to properly ground this generator can result in electrocution.

Ground this generator by tightening the grounding nut against a grounding wire as previously illustrated in Figure 3. A generally acceptable grounding wire is a No. 12 AWG (American Wire Gauge) stranded copper wire. The other end of this grounding wire should be connected to a copper or brass grounding rod that is driven into the earth. Grounding codes can vary by location. Contact a local electrician for information on grounding regulations for your area.

STARTING THE GENERATOR

STOP!

Before starting this generator, confirm that all the steps in the section titled, "Preparing the Generator for Use," of this manual have been correctly completed. If unsure about how to perform any of these steps, call 1-866-460-9436, Monday - Friday, 8 AM - 4 PM Central Time for customer service.

⚠ CAUTION

Disconnect all electrical loads from this generator before attempting to start.

Battery Not Included
(Use a 12 Volt motorcycle no larger than 6" L x 3.8" H x 3.8" W
CCA (Cold Cranking Amps): 130 Min CCA. Comparable brands/models are: 12 Volt 12 Ah Sealed Lead Acid # XTAZ10S or # CYLAZ10SXTA

The location for the battery is behind the metal plate under the electrical panel. If the electric start feature of this generator will be used, first install the battery using the two included cables (one red and the other black) according to the following procedure:

1. Attach one end of the red cable to the positive terminal on the battery and the other end of the red cable to the solenoid.

2. Attach one end of the black cable to the negative terminal and the other end of the black cable to the bolt on the mounting bracket frame.

Step 1 If using Propane LPG fuel, open fuel supply on the LP tank.
If using gasoline, make sure unleaded gasoline fuel has been added to the tank.
Step 2 Turn ENGINE SWITCH at ON position.
Step 3 Move Choke Lever to CHOKE position.
Step 4 For recoil start: Pull the STARTER GRIP slowly until resistance is felt and then pull rapidly. After the engine started, return the STARTER GRIP gently to prevent damage to the starter or housing. DO NOT allow the starter grip to snap back. Return it slowly by hand.
Step 5 For electric start: Press the button and hold until engine starts. If the engine fails to start within five seconds, release and wait at least 5 seconds before attempting to start the engine again.
Step 6 Turn the CHOKE LEVER to RUN position.

Choke Rod
The choke is used to provide an enriched fuel mixture when starting a cold engine. It can be opened and closed by operating the choke rod manually. Pull the rod out toward CLOSED to enrich the mixture for cold starting

USING THE GENERATOR

After the engine has been running for several minutes, electrical devices may be connected to this generator.

AC Usage

Electrical devices running on AC current may be connected according to their wattage requirements. The rated (running) and surge wattage:

Item # GEN7500DF-SS Rated (Running) Wattage	6000
Item # GEN7500DF-SS Surge Wattage	7500

The *rated (running) wattage* corresponds to the maximum wattage a generator can output on a continuous basis.

The *surge wattage* corresponds to the maximum amount of power a generator can output for a short time. Many electrical devices, such as a refrigerator, require short bursts of extra power for starting and stopping fan motors, etc., in addition to their listed rated wattage. Motorized devices typically require more than their rated wattage for startup. The surge wattage ability of a generator allows for this extra power requirement.

The total running wattage requirement of the electrical devices connected to a generator should not exceed the rated wattage of the generator itself. To calculate the total wattage requirement of the electrical devices to be connected, look up the rated (running) wattage of each device and add these numbers together to find the total wattage that all of the devices together will draw from the generator. If the total wattage of the selected devices exceeds the rated wattage of the generator, DO NOT connect all of the devices. Select a combination of the electrical devices that will have a total wattage less than or equal to the rated wattage for the generator, i.e., no more than 6000 for this generator.

⚠ CAUTION

This generator can run at its surge wattage capacity for only a short time. Connect electrical devices requiring a rated (running) wattage equal to or less than the rated wattage of this generator. Never connect devices requiring a rated wattage equal to the surge wattage of a generator.

A device's rated (running) wattage should be listed somewhere on the device itself and/or in its manual. If the wattage specification for a device is not available, the wattage can be calculated by multiplying the Voltage requirement (120 or 240) by the Amperage drawn.
Watts = Volts x Amperes
Or, the wattage required by a device can be estimated by using the following chart (see Figure 7). The chart provides only estimates and it is better to know the exact wattage of each electrical device to be powered by this generator.

Electrical Device	Rated (Running) Watts	Additional Surge Watts
air compressor (1 HP)	1500	3000
air compressor (1 - 1/2 HP)	2500	2500
airless sprayer (1/3 HP)	600	1200
box fan	300	600
clock radio AM/FM	300	0
coffee maker	1500	0
computer w/17 inch monitor	800	0
deep freezer	500	500
electric drill (1/2 HP)	1000	1000
DVD/CD player or VCR	100	0
furnace fan blower (1/2 HP)	800	1300
garage door opener (1/2 HP)	480	520
hot plate	2500	0
light bulb (75 watt)	75	0
microwave oven (1000 watt)	1000	0
quartz halogen work light	1000	0
refrigerator/freezer (18 Cu. Ft.)	800	1600
saw - circular (7 1/4 inch)	1500	1500
saw - miter (10 inch)	1800	1800
saw - reciprocating	960	1040
security system	180	0
electric stove - single element	1500	0
sump pump	800	1200
television (27 inch color)	500	0
electric water heater (40 gallon)	4000	0
window air conditioner (10000 BTU)	1200	1800
window fan	300	600

Figure 7 - Estimated wattage requirements for common electrical devices.

Connect electrical devices to this generator according to the following procedure:

1. Allow the engine to run for several minutes after it has been started.

2. Confirm that the electrical device is switched off prior to plugging it into this generator.

⚠ CAUTION

Connect only electrical devices that are in good working order. Faulty devices or power cords present the risk of electrical shock. Immediately turn off and disconnect any device that commences to operate abnormally, sluggish or abruptly stops. Determine if the problem was the device or the rated load capacity of this generator has been exceeded.

NOTE: Plug appliances into the correct outlet. Connect standard 120 Volt, single phase, 60 Hz loads to the 120 Volt outlet. Connect 240/120Volt, single phase, 60Hz loads with a L14-30 plug only to the 240/120 Volt outlet. See Figure 8 for an illustration of these outlets.

⚠ CAUTION

Even though this Portable LP Generator has an overall rated wattage of 6000, do not attempt to draw more than 20 AMPS from any set of Two receptacles of the 120 Volt outlets. Draws higher than 20 Amps will damage this generator and void the warranty.

3. Make sure AC Reset button is pressed in.

NOTE: While this generator is running, power is available from either the standard 120 Volt outlets or the 240/120 Volt outlet. Both 120 Volts and 240 Volts can be simultaneously drawn from this generator.

4. Turn on the connected electrical devices beginning with the device with the highest rated wattage requirement and then each additional device with the next lower rated wattage requirement.

⚠ CAUTION

Do not connect 50Hz or 3-phase loads to this generator.

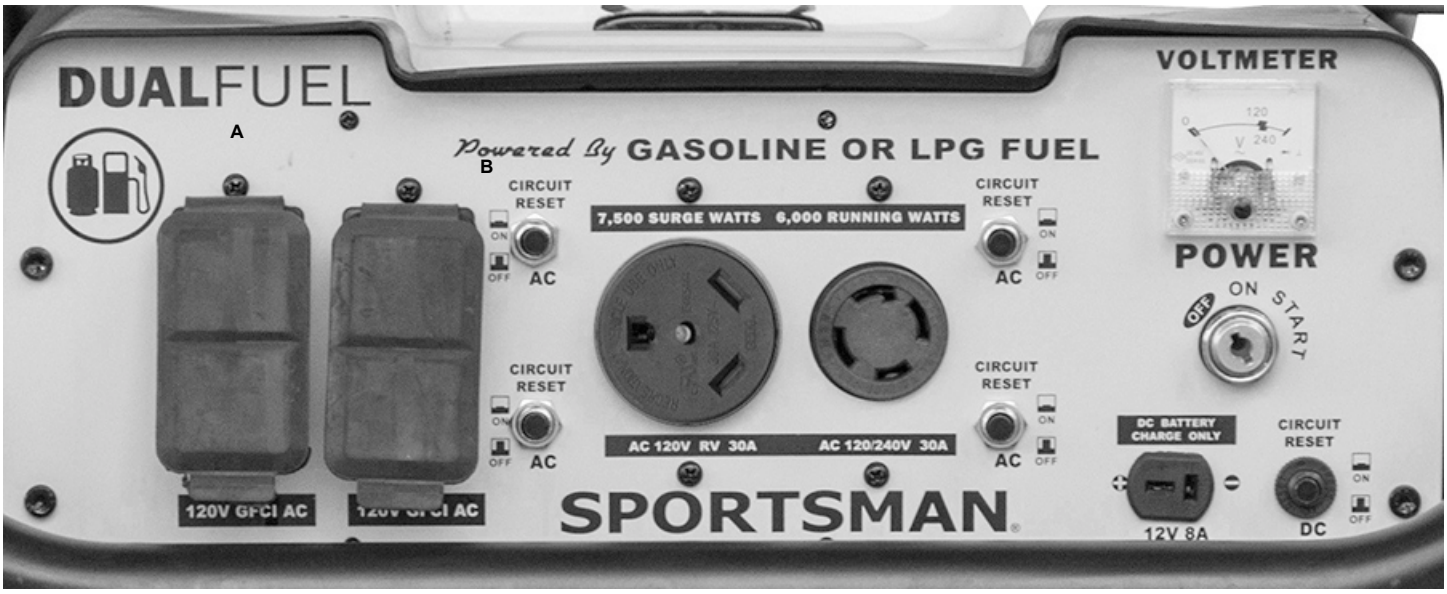

Figure 8 - Outlets available on this generator, from left to right:
4 each 120V AC GFCI , 120V AC RV, 120/240V AC, and 12V DC.

SOME NOTES ABOUT POWER CORDS

Long or thin cords can require more wattage from a generator to power an electrical device. Figure 9 shows the recommended cords according to the power requirement of the electrical device. When using cords that exceed these specifications, allow for the electrical device to have a slightly higher rated wattage requirement.

Device Requirements			**Max. Cord Length (ft) by Wire Gauge**				
Amps	Watts (120V)	Watts (240V)	#8 wire	#10 wire	#12 wire	#14 wire	#16 wire
2.5	300	600	NR	1000	600	375	250
5	600	1200	NR	500	300	200	125
7.5	900	1800	NR	350	200	125	100
10	1200	2400	NR	250	150	100	50
15	1800	3600	NR	150	100	65	NR
20	2400	4800	175	125	75	50	NR
25	3000	6000	150	100	60	NR	NR
30	3600	7200	125	65	NR	NR	NR
40	4800	9600	90	NR	NR	NR	NR

NR = Not Recommended.

Figure 9 - Maximum Extension Cord Lengths by Power Requirement

DC Usage

⚠ CAUTION

The DC outlet is only for recharging 12 Volt automotive-type batteries. Do not connect any other device to this outlet.

⚠ CAUTION

Use this generator only for recharging 12 Volt batteries. NEVER attempt to jumpstart a car with this generator.

⚠ DANGER

Failing to use the correct procedure can cause a battery to explode, seriously injuring anyone nearby. Keep heat, sparks, flame and smoking materials away from the battery.

To connect 12 Volt batteries to the DC outlet:

1. Connect the red charging wire to the positive terminal of the battery and the black charging wire to the negative terminal of the battery.
2. Connect the plug end of the wire to the 12V DC outlet on this generator.
3. Start this generator.
4. When disconnecting, always disconnect the wires from this generator first to avoid a spark.

⚠ DANGER

Storage batteries emit highly explosive hydrogen gas when charged.
Batteries also contain acid, which can cause severe chemical burns.

- Do not allow open flames or cigarettes nearby for several minutes after charging a battery.
- Always wear protective goggles and rubber gloves when charging a battery.
    - If battery acid gets on the skin, flush with water.
    - If battery acid gets in the eyes, flush with water and immediately call a physician.
    - If battery acid is swallowed, drink large quantities of milk and immediately call a physician.

STOPPING THE GENERATOR

To stop this generator:

1. Turn off all connected electrical devices and then unplug them.
2. Allow this generator to run for several more minutes with no electrical devices connected to help stabilize the temperature of this generator.
3. Turn off the engine switch.
4. If using Propane, turn the propane tank fuel valve to the “off” position.

⚠ WARNING

Allow this generator to cool down before touching areas that become hot during operation.

MAINTENANCE/CARE

Proper routine maintenance of this generator is essential for safe, economical, and trouble-free operation. It will help prolong the life of this generator as well as help reduce air pollution. Perform maintenance checks and procedures according to the schedule in Figure 10.

STOP!

If you have questions about maintenance procedures described in this manual, **call 1-866-460-9436 , Monday - Friday, 8 AM - 4 PM Central Time.**

⚠ CAUTION

Never perform maintenance procedures while this generator is running. Allow this generator to cool before commencing any maintenance procedures. Keep heat, sparks and flame away.

⚠ WARNING

Improper maintenance and/or failure to correct any problems prior to operating this generator can cause a malfunction which could cause death or serious injury. Always follow the inspection and maintenance recommendations and schedules in this manual.

Recommended Maintenance Schedule

		Each Use	Every Month or Each 20 Hrs	Every 3 Months or Each 50 Hrs	Every 6 Months or Each 100 Hrs	Every Year or Each 300 Hrs
Engine Oil	Check Level	X				
	Replace		X (First Use)		X	
Air Filter	Check	X				
	Clean			X		
Fuel Filler Cap	Clean				X	
Spark Plug	Check/Clean				X	
	Clean					X

Figure 10 - Recommended maintenance schedule

Cleaning the Generator

Always try to use this generator in a cool dry place. If this generator becomes dirty, the exterior can be cleaned with a damp cloth, soft brush, vacuum and/or pressurized air.

Never clean this generator with a bucket of water and/or a hose as water can get inside and cause a short circuit or corrosion.

Never use gasoline to clean parts of this generator.

Checking the Oil Level

Even though this generator is equipped with an automatic shutoff to protect it from damage due to low oil, it is important to check the oil level in the engine crankcase before each use to ensure that there is a sufficient quantity.

To check the oil level:

1. Verify that this generator is shut down and on a level surface.

2. Unscrew the oil filler/dipstick cap from the engine as illustrated in Figure 11.

3. With a dry cloth, wipe the oil off of the dipstick that is located on the inside of the cap.

4. Insert the dipstick as if replacing the cap and then remove again. There should be oil on the dipstick. If there is no oil on the dipstick, or oil is visible only at the very end of the dipstick, add oil until the engine crankcase is filled (see “Changing/Adding Oil” in this section of this manual).

5. Confirm that the oil filler/dipstick cap is properly in place when finished verifying the oil level.

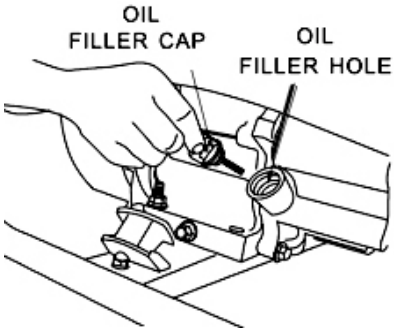

Figure 11 - Checking the Oil

Changing/Adding Oil

The oil level in this generator should be checked before each use. (See Figure 10.) When the oil level is low, add oil until the level is sufficient to operate this generator.

The oil capacity for this Generator engine is 38 ounces.

To drain the oil from this generator:
The oil should be changed after the first 20 hours of operation. The oil should then be changed every 6months, or for every 100 hours of use time, or when it has become contaminated with water and/or dirt.

1. Place a bucket underneath this generator to catch oil as it drains.

2. Using a 12 mm hex wrench, unscrew the oil drain plug located on the crankcase underneath the oil filler/dipstick cap as illustrated in Figure 12.

3. Allow all the oil to drain from this generator.

4. Replace the oil drain plug and tighten with a 12 mm wrench.

NOTE: Never dispose of used motor oil in the trash, down a drain or on the ground. Put oil in a sealed container and contact your local recycling center or auto garage to arrange oil disposal.

To add oil to the engine crankcase:

1. Confirm that this generator is on a level surface.

2. Unscrew the oil filler/dipstick cap from the engine as illustrated in Figure 11 above.

3. Using a funnel, add high detergent motor oil to fill the engine crankcase to the correct quantity. SAE10W-30 oil is recommended for general use.

When the engine crankcase is full, the oil level should reach the lower lip of the oil filling opening as shown in Figure 13.

Item # GEN7500DF-SS Oil Capacity	38 ounces
Item # GEN7500DF-SS Oil Type Recommended	High Detergent Motor Oil, SAE10W-30

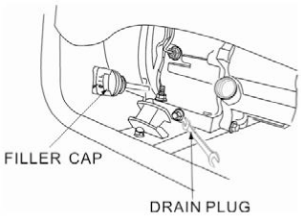

Figure 12 - Draining Oil

Figure 13 - Adding Oil

Air Filter Maintenance

Occasionally verify that the air filter is free of excessive dirt. The air filter will require more frequent cleaning when operating this generator in extremely dusty areas.

1. Unhinge the clasps at the top and bottom of the air filter cover as shown in Figure 14.
2. Remove the sponge-like elements from the casing.
3. Wipe the dirt from inside the empty air filter casing.
4. Wash the sponge-like elements in household detergent and warm water. **Do not use gasoline or a flammable solvent.**
5. Allow the sponge-like elements to dry thoroughly.
6. Soak the dry sponge-like elements in engine oil. Squeeze out any excess oil. The engine will smoke during initial startup if too much oil is left in the air filter.
7. Replace the sponge-like elements in the air filter casing (the fine element first) and replace the cover.

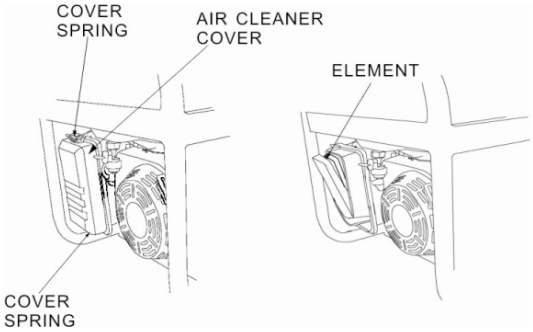

Figure 14 - Removing the Air Filter Casing.

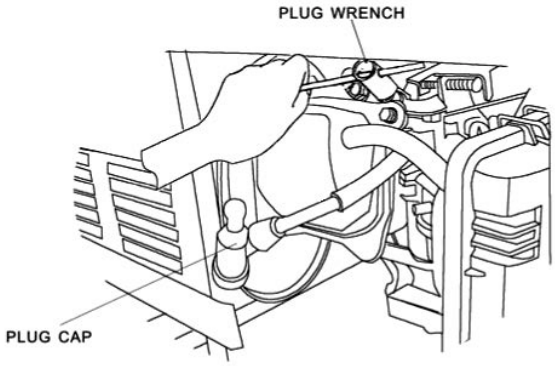

Figure 16 - Locating the Spark Plug

Spark Plug Maintenance

This Dual Fuel Generator uses a spark plug model F6RTC. Comparable model spark plug is Champion RN9YC.

STORAGE/TRANSPORT PROCEDURES

⚠ CAUTION

Never place any type of storage cover on this generator while it is still hot.

When transporting or storing this generator for extended time:

- Allow generator to fully cool before moving it. A hot engine and exhaust system can burn you and ignite some materials.
- Disconnect the battery used for the electric start feature of this generator, first disconnecting the black cable and then the red cable.
- Turn the fuel valve to the “off” position.
- Disconnect the spark plug. (See Figure 16, Locating the spark plug.)
- Do not obstruct any ventilation openings.
- Do not drop or strike this generator while moving it.
- Store this generator in a cool dry area, free of excessive dust.

To store this generator for extended time if you have used gasoline: Drain the gasoline from the carburetor AND fuel tank.

To drain gasoline from this generator:

1. Turn the fuel valve to the “off” position and let the engine run until it stops.
2. Remove the fuel filter cup. (See “Fuel Filter Cup Cleaning” earlier in this section.)
3. Empty the fuel filter cup of any fuel.
4. Place a receptacle underneath this generator to catch gasoline as it drains.
5. Turn the fuel valve to the “on” position and allow all gasoline to drain.
6. Turn the fuel valve to the “off” position.
7. Replace the fuel filter cup.
8. Store the drained gasoline in a suitable place.

TROUBLESHOOTING

IMPORTANT: If trouble persists, **call our customer help line at 1-866-460-9436, Monday - Friday, 8 AM - 4 PM Central Time.**

Symptom	Cause	Solution
Engine will not start.		
	Fuel valve is turned to "closed."	Turn fuel valve to "open."
	Choke is open.	Close the choke.
	Propane Tank is out of fuel.	Replace propane fuel tank.
	Spark plug is dirty.	Clean spark plug.
	Generator is not on level surface.	Move generator to a level surface to prevent triggering the low oil shutdown.
	Oil is low.	Add or replace oil.
Generator runs but does not support all connected electrical devices.	Generator is overloaded.	Reduce draw on generator to within this generator's rated wattage by reducing number of connected electrical devices.
	Short in one of the connected devices.	Disconnect any faulty or short-circuited electrical loads.
	Air filter is dirty.	Clean or replace air filter.
	Loose wiring harness connection	Turn off generator, then check wiring behind control panel and at the end of generator for loose connection. If wires are loose, tighten the screws and/or nuts. Be certain the plug in connectors are pushed together all the way.

Engine runs but there is no electrical output.	Reset button(s) is (are) "off."	Push reset button(s) to "on."
	Loose wiring harness connection	Turn off generator, then check wiring behind control panel and at the end of generator for loose connection. If wires are loose, tighten the screws and/or nuts. Be certain the plug in connectors are pushed together all the way.
	Bad connecting wires/cables.	Try a different extension cord.
	Bad electrical device connected to generator.	Disconnect device, try connecting another device.
	Carbon Brushes are worn down	Turn off generator, then look at the brush holder at the end of the generator to determine if the brushers are still against the copper bands on the end of the rotor. If they are worn down, replace the 2 wires the same way they came off.
	AVR shorted out or burned out	Turn off the generator, then remove the 2 screws at the end of the generator. Look for the burn spots on the back side of the AVR. If there is burn spots, replace the AVR.

SPECIFICATIONS

GEN7500DF-SS 7500 Surge Watt / 6000 Running Watt Portable Dual Fuel LPG Liquid Propane Gas & Gasoline Electric Start Generator

Generator

Type	Brush, Revolving Magnetic Field, Self Exciting, 2-Pole, Single Phase

AC Output

Rated Wattage (W)	6000
Surge Wattage (W)	7500
Rated Voltage (V)	120/240
Rated Amperage	20A+20A+20A+20A at 120 V 30 A at 240 V 30 A at 120 RV
Rated Frequency (Hz)	60
Phase	Single

DC Output

Voltage (V)	12
Circuit Breaker Amperage (A)	8

Engine

Approvals	EPA
Engine Model (HP)	15
Engine Type	4-stroke single cylinder with forced air cooling system.
Ignition System	Non-contact transistor (T.C.I.)
Starting System	Recoil & Electric
Continuous Operating Hours	Run time = 9 hrs @ 50% load Gasoline fuel
Continuous Operating Hours	Run time = 5 hrs @ 50% load per 20 lbs of LPG fuel
Oil Capacity (SAE10W-30)	38 ounces

PARTS DIAGRAM

Crankcase Assy

NO.	PARTS NO.	DESCRIPTION	QTY
1	QJ190QDP.01-11	Buse,locating	2
2	157.5-10	Spacer, Drain	2
3	157.5-9	Bolt,drain	2
4	QJ150FMG.5-8	Dowel Pin	2
5	GB/T5787-86	Bolt M6x12	4
6	QJ190QDP.01.04	Sensor Assy, Fuel Level	1
7	QJ190QDP.01-01	Cover ,crankcase	1
8	QJ190QDP.01-06	Seal Washer	1
9	QJ190QDP.01-07	Oil Level Stick	1
10	QJ190QDP.01.01	Oil Seal	2
11	GB5787-86	Bolt M8x40	7
12	QJ190QDP.01-03	Spacer,crankcase	1
13	GB/T276-94	Bearing6202	2
14	GB/T276-94	Bearing6207	1
15	QJ190QDP.01-10	Pin	1
16	QJ190QDP.01.05	Electronic Switch	1
17	QJ190QDP.01-09	Clip， cord	1
18	QJ190QDP.01-08	Seal Gasket,rubber	1
19	QJ190FPH-2.01.01	Crankcase Assy	1
20	QJ190QDP.01.03	Oil Seal	1
21	GB5787-86	Bolt M6x25	2
22	QJ190FPH-3.01-01	Press Plate	1
23	GB5789-86	Bolt M6x10	1
24	GB5787-86	Bolt M6x35	2
25	GB5787-86	Bolt M8x35	2

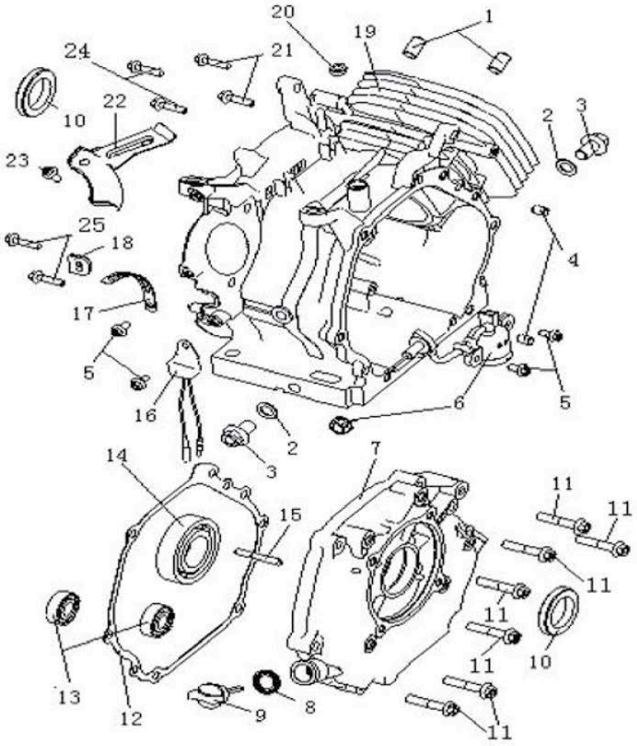

Camshaft Assy

NO.	PARTS NO.	DESCRIPTION	QTY
1	QJ182QDP.03-12	Exhaust Valve	1
2	QJ182QDP.03-11	Lower Retainer	2
3	QJ182QDP.03-05	Valve Spring	2
4	QJ182QDP.03-08	Exhaust Valve Spring Retainer	1
5	QJ182QDP.03-09	Valve Rotator	1
6	QJ182QDP.03-04	Pivot Bolt	2
7	QJ182QDP.03-06	Valve Rocker Arm	2
8	QJ182QDP.03-07	Rocker Arm Pivot	2
9	QJ166QDK.03-11	Pivot Adjusting Nut	2
10	QJ182QDP.03-10	Intake Valve Spring Retainer	1
11	QJ182QDP.03.02	Push Rod	2
12	QJ182QDP.03.03	Push Rod Guide Plate	1
13	QJ182QDP.03-13	Intake Valve	1
14	QJ182QDP.03-01	Valve Lifter	2
15	QJ188FPH03.01	Camshaft Comp.	1
15.1	QJ182QDP.03.01-06	Spring	1
15.2	QJ182QDP.03.01-02	Pin Ⅰ	1
15.3	QJ182QDP.03.01.01-01	Fly Clump Ⅰ	1
15.4	QJ182QDP.03.01.01-02	Fly Clump Ⅱ	1
15.5	QJ182QDP.03.01.01-03	Pin Ⅳ	2
15.6	QJ182QDP.03.01-03	Pin Ⅱ	1
15.7	QJ188FPH.03.01-01	Camshaft	1
15.8	QJ182QDP.03.01-04	Decompress Clump	1
15.9	QJ182QDP.03.01-05	Pin Ⅲ	1

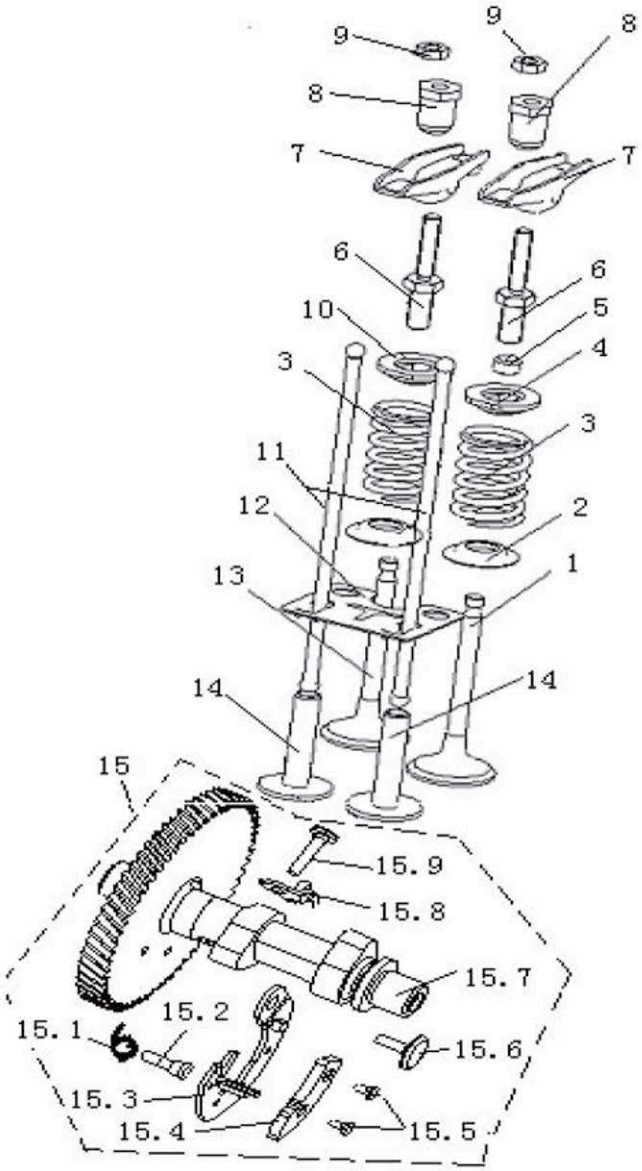

Carburetor Assy

No.	PARTS NO.	DESCRIPTION	QTY
1	188F07-04	Air Cleaner Gasket	2
2	P27DW-90-EPA	Carburetor Assy	1
3	188F07-03	Carburetor Gasket	1
4	188F07-02	Insulator Plate	1
5	188F02-16	Inlet Gasket	1
6	YG 5×9-EPA/CARB	Fuel Hose	1
7	GG- Φ 9	Clamping Bad	2

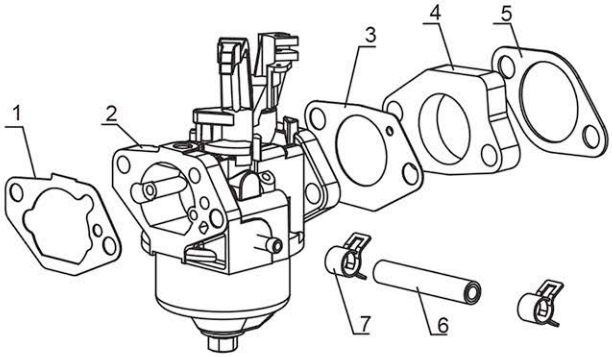

Engine Cover

NO.	PARTS NO.	DESCRIPTION	QTY
1	QJ182FPH-2.05.01	Speed Adjustment Base Assembly	1
2	QJ168QDJ.05.01-02	Spring	1
3	GB/T818-2000	Screw M5x35	1
4	GB/T5789-1986	Bolt M6x12	2

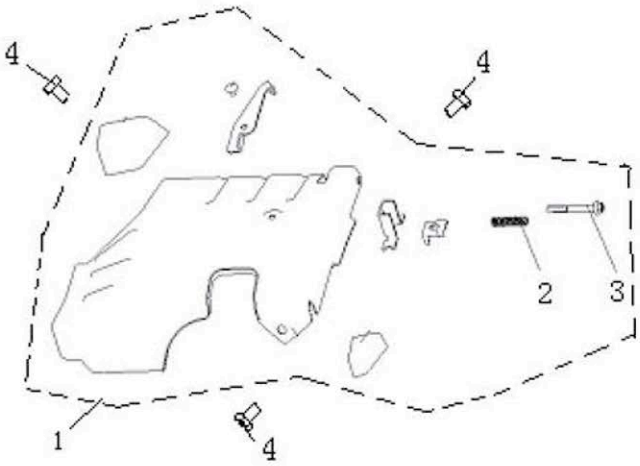

EPA System

NO	PART NO	DESCRIPTION	QTY
1	JF182FPH-15.05.01	Carbon Canister	1
2	JF168FJH-15.05-08	Spring Clamps Φ 8	1
3	KE6600D.10-01	Rubber Pipe Φ 5xΦ8x560	1
4	QJ2900.08.02A	Check Valve	1
5	JF1P64FJV-S.14-05	Spring Clamps Φ 7	1
6	QJ168FJH-3.05-01	Colloid Pipe	1
7	JF168FJH-15.05-09	Spring Clamps Φ 12	2

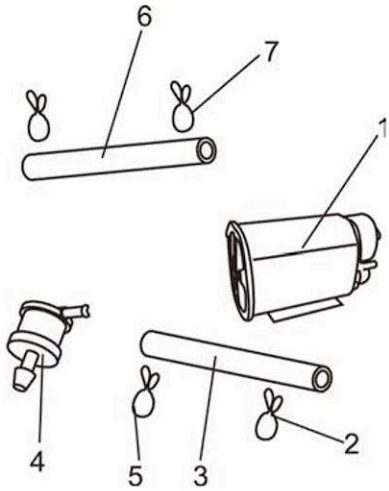

GasTankAssembly

NO.	CODE	DESCRIPTION	QTY
1	QJ6800.01.01B	Fuel Tank Comp	1
2	QJ2600.01-04	Filtering Net	1
3	QJ2600.01.05	Fuel Tank Cap	1
4	GB/T819-85	Screw M5*10	2
5	QJ6000.01.03	Sender Unit	1
6	GB/T5789-86	Bolt M6*20	4
7	GB/T96.2-2002	Washer	4
8	QJ2600.01-02	Fuel Tank Rubber Hose	4
9	QJ2600.01-01	Fuel Tank Rubber	4
10	QJ6500.01.02	Fuel Valve	1

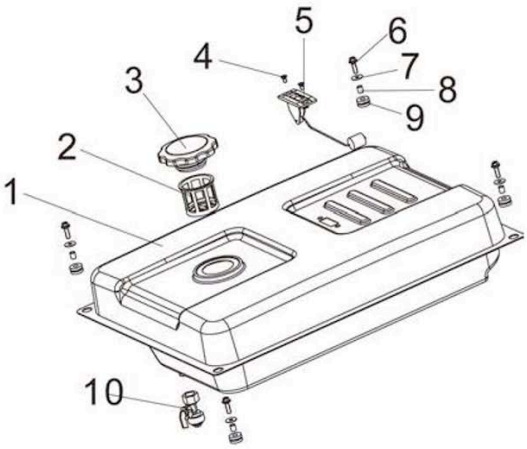

Generator

NO.	PARTS NO.	DESCRIPTION	QTY
1	GB/T5787-86	Bolt M5x12	3
2	QJ6500.03-01	Right Cover	1
3	QJ6000.03.04	AVR	1
4	GB/T5780-2000	Bolt M5x20	3
5	QJ6500.03-03	Connector	1
6	GB/T5789-86	Bolt M5x17	4
7	QJ2500.03-04	Rectifier KBPC2506	1
8	GB/T5789-86	Bolt M10x260x1.25	1
9	QJ6000.03.03	Brushes	1
10	QJ6000.03-02	Motor Shell(End Casting)	1
11	QJ7500.03.01	Stator Assembly	1
12	QJ7500B.02-01	Motor Cover	1
13	QJ6000.03.03.01	Needle Bearing	1
14	QJ6000.03.03-06	Carbon Brush Ring	1
15	QJ7500.03.02	Rotor	1
16	QJ6500.03-01	Impeller	1
17	GB/T95-2002	Washer	3
18	GB/T93-87	Spring Washer	3
19	GB/T818-2000	Bolt M5x12	3
20	GB/T5789-86	Bolt M6x170	4
21	GB/T5789-86	Bolt M5x12	2

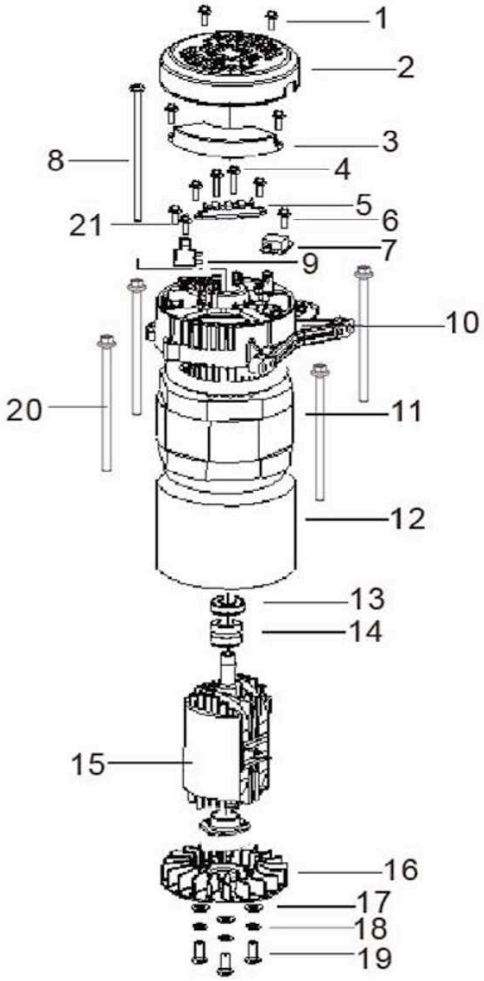

Control Panel Assembly

No.	PARTS NO.	DESCRIPTION	QTY
1	GEN7500SS04-02	Panel Cover	1
2	GB2672 M6*12	Torx Screw	8
3	G20	GFCI Socket	2
4	98-30A	Protector 30A	2
5	519707001	Plastic Box	1
6	YGB-028	RV Socket	1
7	L14-30	L14-30 Socket	1
8	98-20A	Protector 20A	2
9	GENTRI9K04-05	Engine Switch	1
10	88-8A	Protector 8A	1
11	GEN7500SS04-01	Panel Plate	1
12	DE-450	Volt Meter	1
13	YG T12-10	DC Socket	1

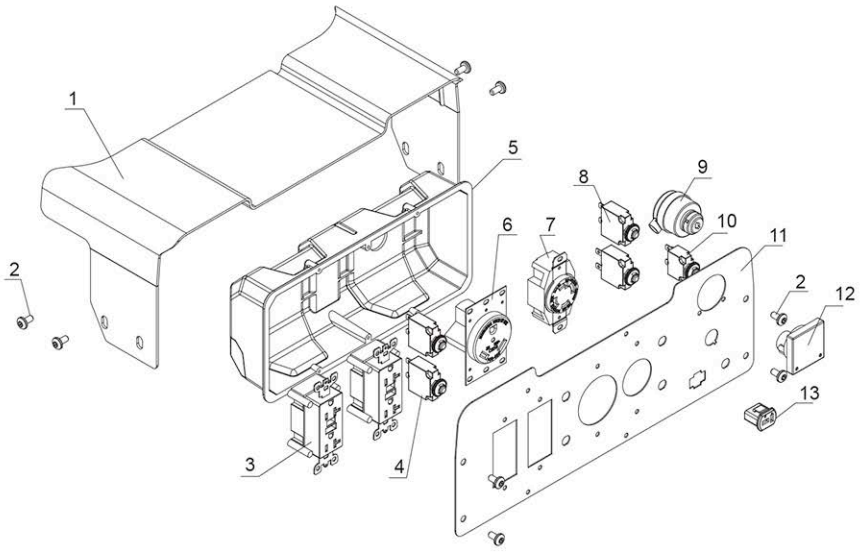

Frame Assembly

No.	PARTS NO.	DESCRIPTION	QTY
1	GEN7500DF03-02.3	Rubber Jacket	2
2	GEN7500DF03-02.1	Handle	2
3	GB6183.1 M8	Lock Nut	2
4	GB16674 M8×50	Bolt	2
5	GEN7500SS03-01-415	Frame Assy	1
6	GEN7000E03-08-75	Foot Bracket	1
7	SP6500E03-12.2	Rubber Foot	2
8	GB6177.1 M8	Flange Nut M8	6
9	GB16674 M8×25-Φ13	Bolt	4
10	GB16674 M8×14	Bolt	2
11	KJ5000A03-04	Shock Proof Feet,Big	2
12	KJ5000A03-03	Shock Proof Feet,Small	2
13	GB16674 M10*1.25*110	Bolt	2
14	GEN7500DF03-06	Rubber Wheels	2
15	GEN7500DF03-05	Wheel Axis Spacer	2
16	GEN7500DF03-16	Wheel Washer	2
17	GB6177.2 M10*1.25	Flange Nut	2
18	GB2672 M6*12	Torx Screw	4
19	GEN7500SS04-03L	Left Bracket,Panel	1
20	GEN7500SS04-03R	Right Bracket,Panel	1
21	GEN7500SS03-02.2	Plastic Cover	2

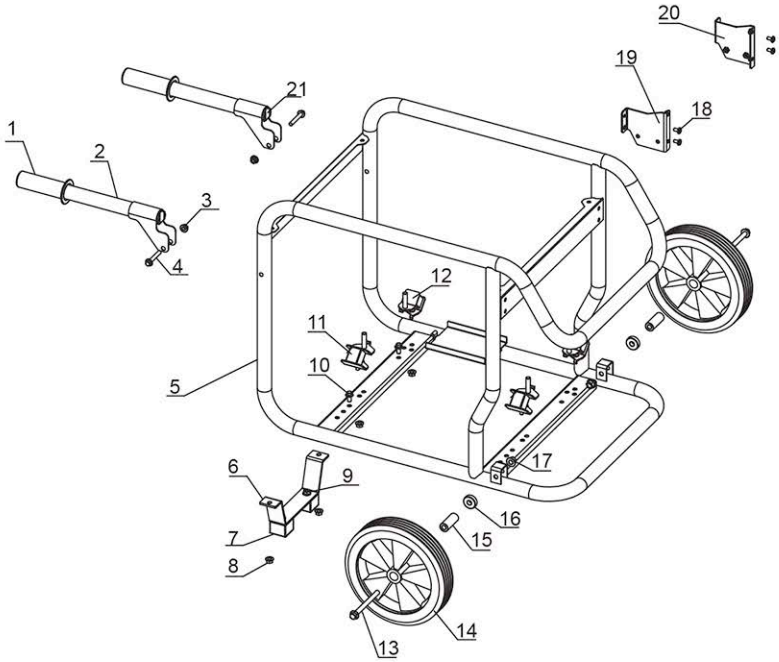

Air cleaner Assembly

NO.	PARTS NO.	DESCRIPTION	QTY
1	JF182FPH-15.04B	Air Cleaner Assy	1
2	QJ182QDP.11-6	Clip,fixup Ⅰ	2
3	QJ182QDP.11-7	Clip,fixup Ⅱ	2
4	JF182FPH-15.04-01	Air Cleaner Cover	1
5	GB/T6177-2000	Nut M5	6
6	QJ182QDP.11-9	Core,filtrate	1
7	QJ182QDP.11-3	Hole Board	1
8	QJ182QDP.11-4	Seal Gasket,	1
9	QJ182QDP.11-5B	Below Shell, Air Cleaner	1
10	182FPH-2.01.02	Air Cleaner	1
11	GB/T6177-2000	Nut M6	1

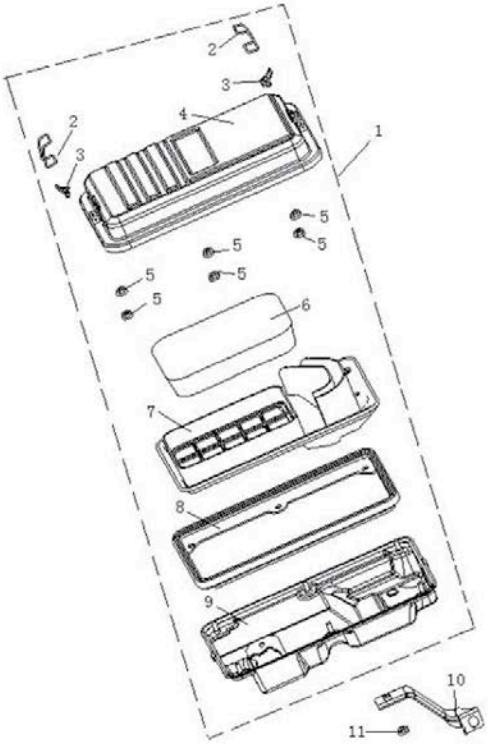

Cylinder Head Assy

NO.	PARTS NO.	DESCRIPTION	QTY
1	QJ182QDP.02.01	Cylinder Head Assy	1
2	QJ182QDP.02-01	Bolt, Cylinder Head	4
3	JF182FPH-15.02.01	Cover Assy, Cylinder Head	1
4	QJ182QDP.02-03	Spacer,seal	1
5	QJ182QDP.02-04	Clamp	1
6	QJ182QDP.02-02	Bolt	1
7	QJ188QDP.02.02	Spacer Assy,cylinder Head	1
8	QJ182QDP.02-05	Bolt, Intake Pipe	2
9	QJ182QDP.02-06	Cowling	1
10	GB5787-88	Bolt M6x12	1
11	QJ182QDP.02-07	Spacer,intake Pipe	1
12	QJ182QDP.02.04	Spark Plug	1
13	QJ182QDP.02.02-02	Washer,cylinder Head	1
14	QJ182QDP.02.01-05	Canal,intake Valve	1
15	QJ182QDP.02.01-03	Canal,exhaust Valve	1
16	QJ182QDP.02.01-02	Ring,exhaust Valve	1
17	QJ182QDP.02.01-04	Ring,intake Valve	1
18	GB/T6177-2000	Nut M6	2

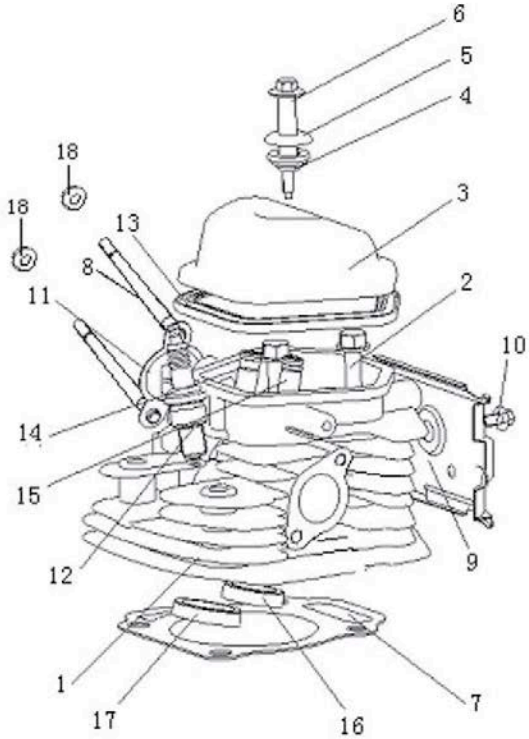

Starter Assy

NO.	PARTS NO.	DESCRIPTION	QTY
1	GB/T5789-86	Bolt	3
2	QJ182QDP.08.02	Starter Cover Assy	1
3	GB/T5789-86	Bolt M6x12	5
4	QJ182QDP.08.01-01B	Cowling Assy, Cylinder	1
5	QJ182QDP.08-01	Starter Canister	1
6	QJ182QDP.08-02	Fan Wheel	1

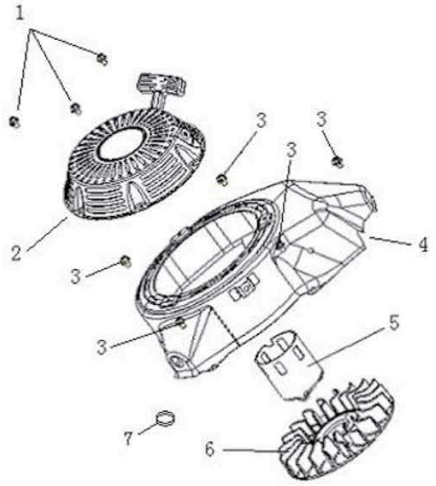

Starter Assy

NO.	PARTS NO.	DESCRIPTION	QTY
1	QJ182FPH-3.03.01	Starter Moter	1
2	QJ188FPH.06.02	Starter Solenoid	1
3	QJ188FPH.06.02.01	Relay Wire	1
4	QJ182FPH-3.02.02	Charge Winding Comp	1
5	GB/T5787-1986	Bolt M5x20	2
6	QJ188FPH.06.03.01D	Red Wire	1
7	QJ188FPH.06.03.02D	Black Wire	1

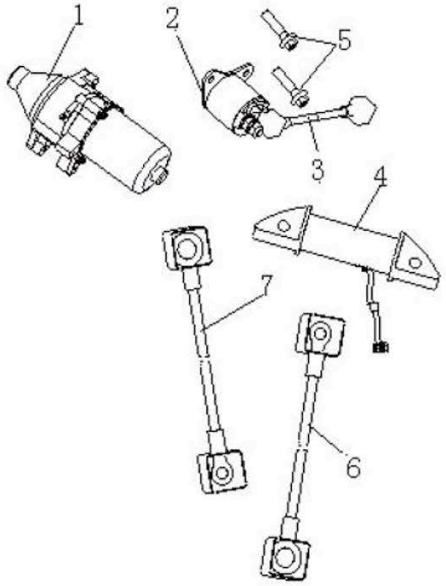

Muffler

NO.	PARTS NO.	DESCRIPTION	QTY
1	QJ7500D.05.01C	Muffler (CARB)	1
2	GB/T70.1-2000	Hex Head Socket Cap Screw M8x20	2
3	GB/T93-87	Spring Washer	2
4	QJ6000.07-02	Muffler Gasket	1
5	GB/T6177-2000	Hexagon Flange Nut M6	2
6	QJ3200.02.04-01	Gulp Valve Washer	1
7	QJ3200.02.04	Gulp Valve	1
8	GB/T95-2002	Washer	2
9	GB/T93-87	Spring Washer	2
10	GB/T818-2000	Screw M6x25	2
11	GB/T5789-1986	Hexagon Flange Bolt M8*12	1

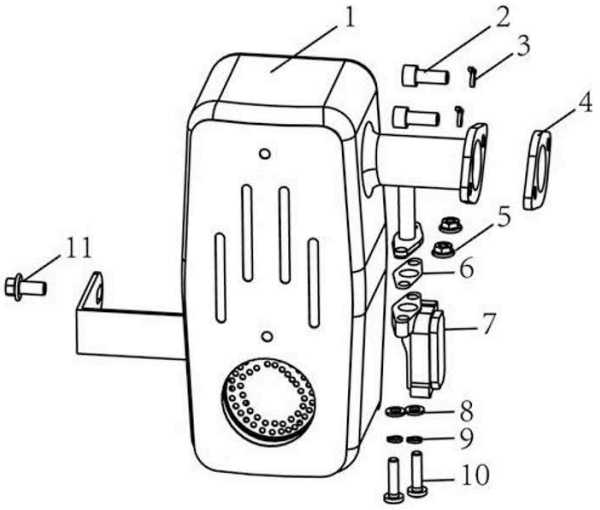

Crankshaft Assy & Piston

NO.	PARTS NO.	DESCRIPTION	QTY
1	QJ188FPH.04-01	Piston	1
2	QJ188FPH.04-02/03/.01	Piston Ring Assy.	1
2.1	QJ188FPH.04-02	Ring 1st	1
2.2	QJ188FPH.04-03	Ring 2nd	1
2.3	QJ188FPH.04.01	Ring Set Oil	1
3	QJ188FPH.04-04	Pin, Piston	1
4	QJ182QDP.05-05	Circlip	2
5	QJ182QDP.05.02	Connecting Rod Assy	1
5.1	QJ182QDP.05.02-01	Connecting Rod	1
5.2	QJ182QDP.05.02-02	Connecting Rod Cap	1
5.3	QJ182QDP.05.02-03	Connecting Rod Bolt	2

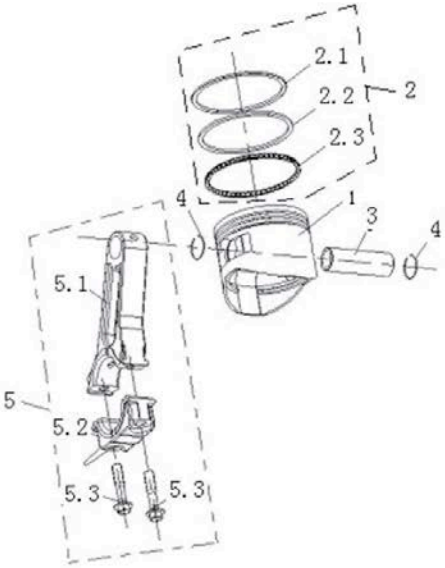

Ignition Assy

NO.	PARTS NO.	DESCRIPTION	QTY
1	QJ182FPH-3.02.01	Rotor Assy	1
2	QJ182QDP.07.01	High Voltage Wrap, Assy	1

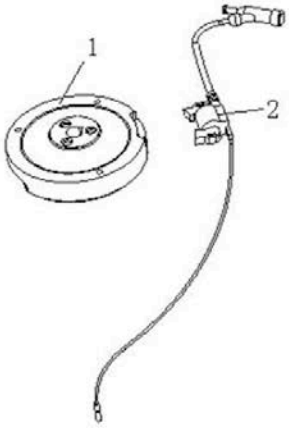

Regulator

NO	PART NO	DESCRIPTION	QTY
1	QJ7500LGG.10.01	Regulator(LPG)	1
2	QJ7500LGG.10.02	Low Pressure Regulator	1
3	QJ7500LGG.10-01	Regulator Bracket	1

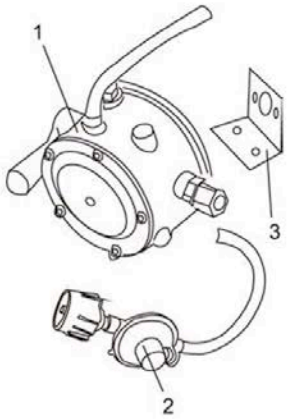

Motor Shield Assy

NO.	PART NO.	DESCRIPTION	QTY
1	QJ6500.03-05	Motor shield	1

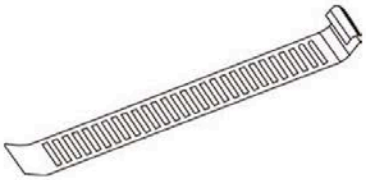

Timing Assy

NO.	PARTS NO.	DESCRIPTION	QTY
1	QJ190QDP.06-09	Pull Pole,steel Wire	1
2	QJ190QDP.06-10	Pull Spring,little	1
3	QJ190QDP.06-01	Pull Pole,timing Implement	1
4	QJ190QDP.06-08	Pull Spring,big	1
5	GB/T6177-2000	Nut M6	1
6	QJ190QDP.06-05	Washer Ⅰ	1
7	QJ190QDP.06-04	Fork	1
8	QJ190QDP.06.01-03	Governor Weight	3
9	QJ190QDP.06.01-02	Governor Weight Pin	3
10	QJ166QDK.06-07	Washer Ⅲ	1
11	QJ190QDP.06.01-01	Centrifugal Timing Implement	1
12	QJ166QDK.01-02	Clip	1
13	QJ168QDJ.05-08	Washer Ⅲ	1
14	QJ190QDP.06-06	Handspike Cover	1
15	QJ190QDP.06-02	Clip	1
16	QJ190QDP.06-03	Bolt,square Toes	1

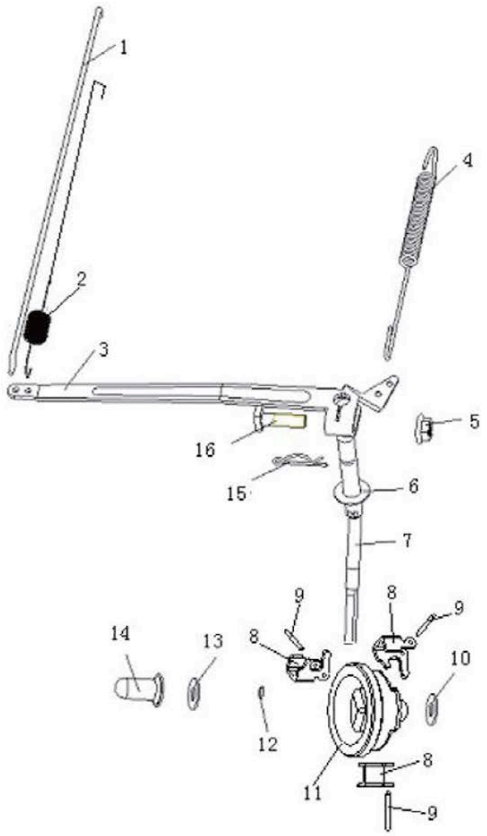

Crankshaft Assy

NO.	PARTS NO.	DESCRIPTION	QTY
1	QJ190QDP.04-01	Balance Shaft	1
2	QJ190QDP.04-02	Nut	1
3	QJ190QDP.04-03	Woodruff Key	1
4	QJ190QDP.04-04C	Crankshaft	1
5	QJ190QDP.04-05	Crankshaft Gear Ⅰ	1
6	QJ190QDP.04-06	Crankshaft Gear Ⅱ	1
7	GB/T276-94	Bearing6207	1
8	QJ190QDP.04C	Crankshaft Assy.	1

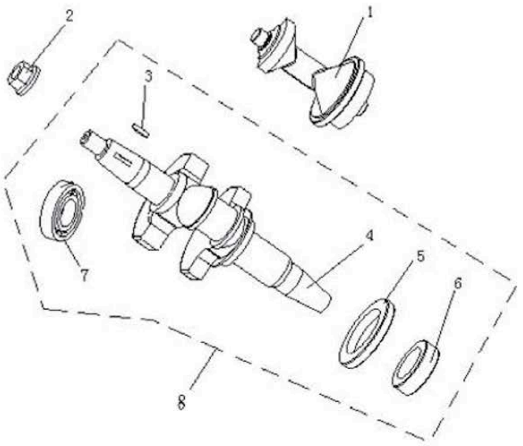

WIRING DIAGRAM

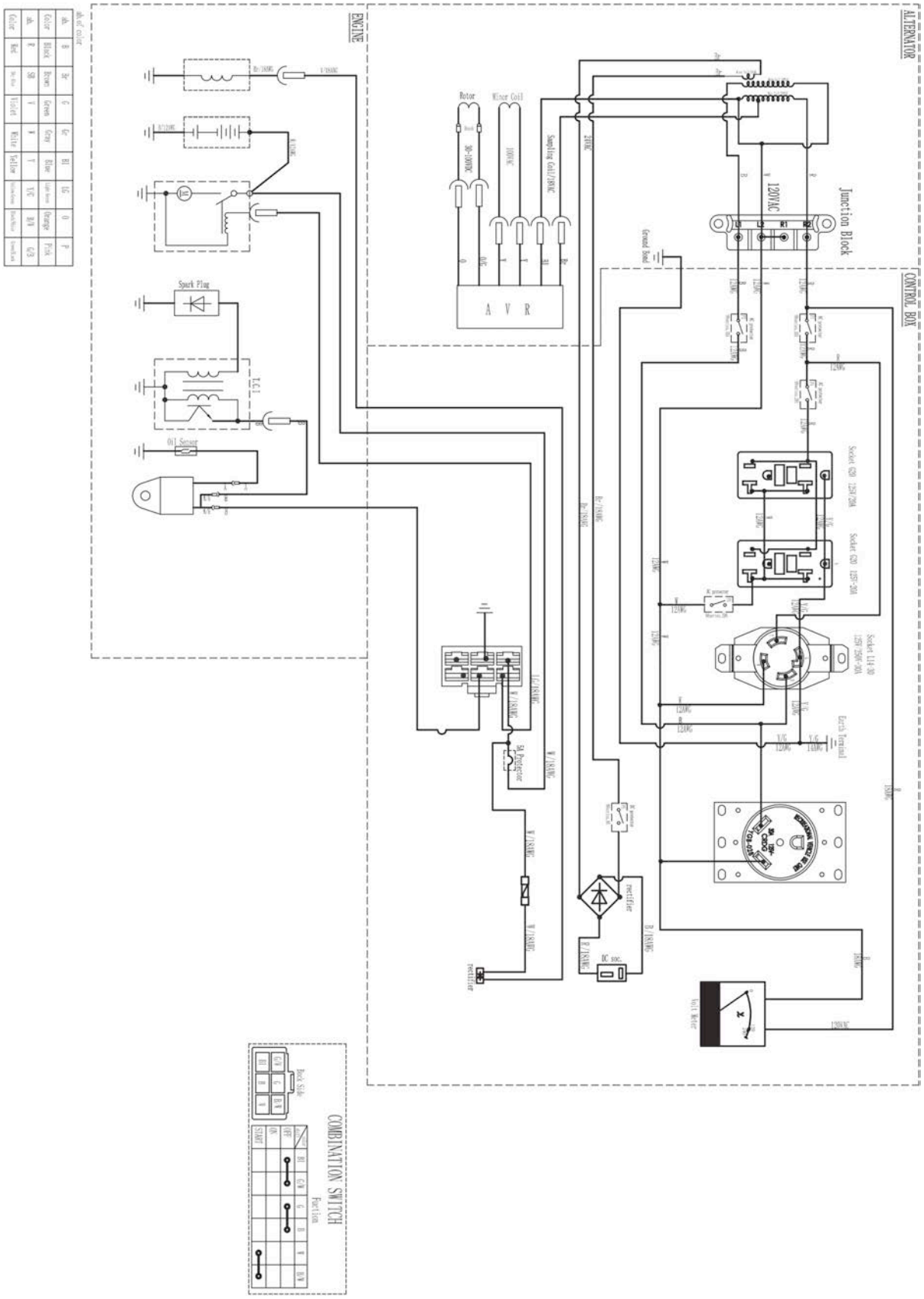

PORTABILITY KIT INSTALLATION

Figure 1

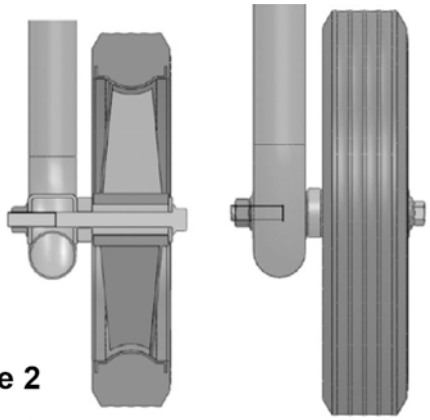

Figure 2

1. Locate the wheel and axle bolt and flat washer. (Figure 1).
2. Attach the wheel by aligning the frame with the wheel, and insert the flat washer first, then the axle bolt. Tighten until wheel is secure. (Figure 2).
3. Install the mounting feet (Figure 3) onto the front of the frame. Inserting the bolts through the frame and add the mounting feet on both the left and right side.

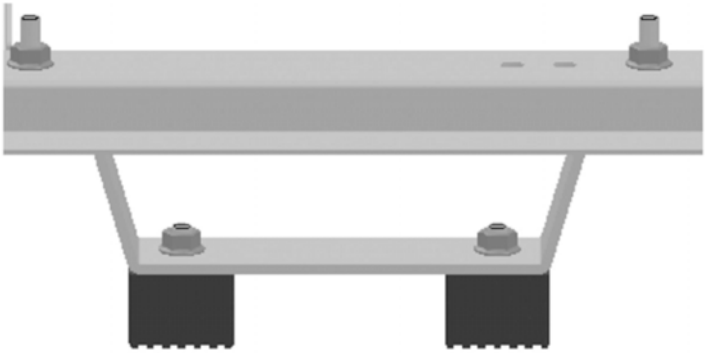

Figure 3

EMISSION CONTROL SYSTEM WARRANTY
Buffalo Corp

Your Warranty Rights and Obligations

The United States Environmental Protection Agency (US EPA) and Buffalo Corp. are pleased to explain the exhaust and evaporative emissions control system warranty on your 2020-2021 model year small off-road engine. Buffalo Corp. must warrant the emissions control system on your small off-road engine for the periods of time listed below provided there has been no abuse, neglect or improper maintenance of your small off-road engine or equipment leading to the failure of the emissions control system.

Your emissions control system may include parts such as the carburetor or fuel-injection system, the ignition system, catalytic converter, fuel tanks, fuel lines (for liquid fuel and fuel vapors), fuel caps, valves, canisters, filters, clamps and other associated components. Also included may be hoses, belts, connectors, and other emission-related assemblies.

Where a warrantable condition exists, Buffalo Corp. will repair your small off-road engine at no cost to you including diagnosis, parts and labor.

Manufacturer's Warranty Coverage:

The exhaust and evaporative emissions control system on your small off-road engine is warranted for two years. If any emissions-related part on your small off-road engine is defective, the part will be repaired or replaced by Buffalo Corp.

Owner's Warranty Responsibility

As the small off-road engine owner, you are responsible for the performance of the required maintenance listed in your owner's manual. Buffalo Corp. recommends that you retain all receipts covering maintenance on your small off-road engine, but Buffalo Corp. cannot deny warranty coverage solely for the lack of receipts or for your failure to ensure the performance of all scheduled maintenance.

As the small off-road engine owner, you should however be aware that Buffalo Corp. may deny you warranty coverage if your small off-road engine or a part has failed due to abuse, neglect, or improper maintenance or unapproved modifications.

You are responsible for presenting your small off-road engine to a Buffalo Corp. distribution center or service center as soon as the problem exists. The warranty repairs shall be completed in a reasonable amount of time, not to exceed 30 days.

If you have any questions regarding your warranty rights and responsibilities, you should contact Buffalo Corp. customer service representative at 1-866-460-9436 or write to info@buffalotools.com.

DEFECTS WARRANTY COVERAGE

Adopted by the EPA, Buffalo Corp. warrants to the ultimate purchaser and each subsequent purchaser that the small off-road engine (SORE)(1) has been designed, built and equipped so as to conform with all applicable regulations; and (2) is free from defects in materials and workmanship that cause the failure of a warranted part to conform with those regulations as may be applicable to the terms and conditions stated below.

(a) The warranty period begins on the date the engine is delivered to an ultimate purchaser or first placed into service. The warranty period is two years.

(b) Subject to certain conditions and exclusions as stated below, the warranty on emissions related parts is as follows:

(1) Any warranted part that is not scheduled for replacement as required maintenance in your Owner's Manual is warranted for the warranty period stated above. If the part fails during the period of warranty coverage, the part will be repaired or replaced by Buffalo Corp. according to Subsection (4) below. Any such part repaired or replaced under warranty will be warranted for the remainder of the periods.

(2) Any warranted part that is scheduled only for regular inspection in your owner's manual is warranted for the warranty period stated above. Any such part repaired or replaced under warranty will be warranted for the remaining warranty period.

(3) Any warranted part that is scheduled for replacement as required maintenance in your owner's manual is warranted for the period of time before the first scheduled replacement date for that part. If the part fails

before the first scheduled replacement, the part will be repaired or replaced by Buffalo Corp. according to Subsection (4) below. Any such part repaired or replaced under warranty will be warranted for the remainder of the period prior to the first scheduled replacement point for the part.
(4) Repair or replacement of any warranted part under the warranty provisions herein must be performed at a warranty station at no charge to the owner.
(5) Notwithstanding the provisions herein, warranty services or repair will be provided at all of our distribution centers that are franchised to service the subject engines.
(6) The engine owner must not be charged for diagnostic labor that leads to the determination that a warranted part is in fact defective, provided that such diagnostic work is performed at a warranty station.
(7) Buffalo Corp. is liable for damages to other engine components proximately caused by a failure under warranty of any warranted part.
(8) Throughout the engine warranty period stated above, Buffalo Corp. will maintain a supply of warranted part sufficient to meet the expected demand for such parts.
(9) Any replacement may be used in the performance of any warranty maintenance or repairs and must be provided without charge to the owner. Such use will not reduce the warranty obligations of Buffalo Corp.
(10) Add-on or modified parts that are not exempted by the EPA may not be used. The use of any non-exempted add-on or modified parts by the ultimate purchaser will be grounds for disallowing a warranty claims. Buffalo Corp. will not be liable to warrant failures of warranted parts caused by the use of a non-exempted add-on or modified part.
(11) The manufacturer issuing the warranty shall provide any documents that describe that manufacturer's warranty procedures or policies within five working days of request by EPA.

EMISSION WARRANTY PARTS LIST
(1) Fuel Metering System:
(a) Gasoline carburetor assembly and its internal components
(b) Carburetor gaskets (c) fuel lines (for liquid fuel and fuel vapors)
(d) Clamps (e) Fuel tank
(f) Fuel line fittings (g) Pressure regulator (if equipped)
(h) Mixer assembly and its internal components (if equipped)
(2) Air induction system including:
(a) Intake pipe/manifold (b) Air cleaner
(3) Ignition system including:
(a) Spark plug (b) Ignition coil
(4) Catalytic muffler assembly including:
(a) Muffler gasket (b) Exhaust manifold
(c) Catalytic converter
(5) Crankcase breather assembly including:
(a) Breather connection tube
(6) Fuel tank evaporative emissions control system including:
(a) Purge valves (b) Fuel cap
(c) Fuel tank (d) fuel lines (for liquid fuel and fuel vapors)
(7) Miscellaneous items used in above systems including:
(a) Switches (b) Hoses, belts connectors and assemblies
(8) Air injection system
(a) Pulse valve

Please Note:
For this warranty, Buffalo Corp. shall warrant the Evaporative and Exhaust combined emission control system on your products.

2020 10 S