0912

GEN154A
2000 Surge Watts / 1200 Running Watts
PORTABLE GENERATOR
INSTRUCTION MANUAL

READ ALL INSTRUCTIONS AND WARNINGS BEFORE USING THIS PRODUCT.

This manual provides important information on proper operation & maintenance. Every effort has been made to ensure the accuracy of this manual. These instructions are not meant to cover every possible condition and situation that may occur. We reserve the right to change this product at any time without prior notice.

IF THERE IS ANY QUESTION ABOUT A CONDITION BEING SAFE OR UNSAFE,

DO NOT OPERATE THIS PRODUCT!

DO NOT RETURN THIS PRODUCT TO THE RETAILER - CONTACT CUSTOMER SERVICE.

If you experience a problem, have questions or need parts for this product, call Customer Service at **1-866-460-9436, Monday-Friday, 8 AM - 4 PM Central Time**. A copy of the sales receipt is required.

FOR CONSUMER USE ONLY – NOT FOR PROFESSIONAL USE.

KEEP THIS MANUAL, SALES RECEIPT & APPLICABLE WARRANTY FOR FUTURE REFERENCE.

GEN154A 2000 Surge Watts / 1200 Running Watts Portable Generator

FEATURES:

- 4-Stroke OHV Engine
- Recoil Start
- 2.8 HP Gasoline Engine
- 2 - 120 Volt A/C Outlet
- 1 - 12 Volt D/C Outlet
- 1.8 Gallon Fuel Tank
- Engine Run Time: 11 Hours @ 50% Load
- 2000 Surge Watts / 1200 Running Watts
- EPA Approved

TABLE OF CONTENTS

PACKAGE CONTENTS
PACKAGE CONTENTS....9

PREPARING THE GENERATOR FOR USE....11
Using This Generator For The First Time....11
Step 1 – Add Oil....11
Step 2 – Add Gasoline....12
Step 3 – Ground The Generator....12
Subsequent Use Of This Generator....13
Step 1 – Verify Oil Level....13
Step 2 – Verify Gas Level....13
Step 3 – Ground The Generator....13

STARTING THE GENERATOR....14

USING THE GENERATOR....15
AC Usage....15
DC Usage....17

MAINTENANCE/CARE....18
Cleaning The Generator....18
Checking The Oil Level....19
Changing/Adding Oil....19
Air Filter Maintenance....20
Spark Plug Maintenance....20
Emptying The Fuel Tank....20

THIS ENGINE MEETS U.S. EPA EMISSION STANDARDS UNDER 40 CFR 1054.625 .

The emission-related warranty is valid for two (2) years. Keep the purchase receipt and mail in the product registration card for proof of purchase. NB Corp limits emission-related warranty repairs to authorized service centers for owners located within 100 miles of an authorized service center. For owners located more than 100 miles from an authorized service center, NB Corp will, in its sole discretion, either pay for shipping costs to and from an authorized service center, provide for a service technician to come to the owner to make the warranty repair, or pay for the repair to be made at a local non-authorized service center. The provisions of this paragraph apply only for the contiguous states, excluding the states with high-altitude areas identified in 40 CFR part 1068, Appendix III.

To exercise this warranty, DO NOT RETURN TO RETAILER. Instead, call Customer Service toll free at 1-866-460-9436 (email address info@buffalotools.com) and you will be instructed on where to take the engine for warranty service. Take the generator and proof of purchase (your receipt) to the repair facility recommended by the Customer Service Representative. The warranty does not extend to generators damaged or affected by fuel contamination, accidents, neglect, misuse, unauthorized alterations, use in an application for which the product was not designed and any other modifications or abuse.

1 YEAR LIMITED WARRANTY

Generators are warranted to be free from defects in materials and workmanship for a period of 1 year from date of original purchase. NB Corp. is not liable for any indirect, incidental or consequential damages from the sale or use of this product. Any implied warranties are limited to 1 year as stated, or as otherwise stated, in this written limited warranty. Some states do not allow the exclusion or limitation of incidental or consequential damages. Some states do not allow limitation on the length of an implied warranty. NB Corp will repair or replace, at its discretion, any part that is proven to be defective in materials or workmanship under normal use during the 1 year warranty period. Warranty repairs or replacements will be made without charge for parts or labor. Parts replaced during warranty repairs will be considered as part of the original product and will have the same warranty period as the original product. This warranty gives you specific legal rights, and you may have other rights that vary from state to state.

RECOGNIZE SAFETY SYMBOLS, WORDS AND LABELS

What You Need to Know About Safety Instructions

Warning and Important Safety Instructions appearing in this manual are not meant to cover all possible conditions and situations that may occur. Common sense, caution and care must be exercised when operating or cleaning tools and equipment.

Always contact your dealer, distributor, service agent or manufacturer about problems or conditions you do not understand.

This is the safety alert symbol. It is used to alert you to potential personal injury hazards. Obey all safety messages that follow this symbol to avoid possible injury or death.

DANGER — DANGER indicates an imminently hazardous situation which, if not avoided, will result in death or serious injury.

WARNING — WARNING indicates a potentially hazardous situation which, if not avoided, could result in death or serious injury.

CAUTION — CAUTION indicates a potentially hazardous situation which, if not avoided, may result in minor or moderate injury.

CAUTION — CAUTION used without the safety alert symbol indicates a potentially hazardous situation which, if not avoided, may result in property damage.

Notice Regarding Emissions:
Engines certified to comply with California and U.S. EPA emission regulations for SORE (Small Off Road Equipment) are certified to operate on regular unleaded gasoline and may include the following emission control systems: Three-Way Catalyst (TWC) (if equipped), and Engine Modifications (EM).

Legal Requirements:
Federal and/or State Occupational Safety and Health Administration (OSHA) regulations, local codes, and/or ordinances may apply to the intended use of this generator. Consult a qualified electrician, electrical inspector, and/or the local agency having jurisdiction. Some areas require generators to be registered with local utility companies. Additional regulations may apply if this generator will be used at a construction site.

IMPORTANT SAFETY INSTRUCTIONS

STOP!

Before using this generator and if you have any questions regarding the hazard and safety notices listed in this manual and/or on this generator, call 1-866-460-9436, Monday - Friday, 8 AM - 4 PM Central Time.

⚠ DANGER

Carbon Monoxide Gas: When in operation, the exhaust from this generator contains poisonous carbon monoxide gas. Carbon monoxide gas is both odorless and colorless AND may be present even if you do not see or smell gas. Breathing this poison gas can lead to headaches, dizziness, drowsiness, loss of consciousness and eventually death.
• USE THIS GENERATOR ONLY OUTDOORS IN NON-CONFINED AREAS. DO NOT SECURE THE GENERATOR WITH A CHAIN OR ROPE, AS THIS WILL MAKE IT DIFFICULT TO MOVE IN AN EMERGENCY.
• Keep at least several feet of clearance on all sides to allow proper ventilation for this generator.

⚠ WARNING

Chemicals: According to the State of California, the exhaust from this generator contains chemicals known to cause cancer, birth defects, or other reproductive harm.

⚠ WARNING

Flammable Gasoline: This generator may emit highly flammable and explosive gasoline vapors, which can cause severe burns or even death. A nearby open flame can lead to an explosion even if not directly in contact with gasoline.
• Do not operate this generator near open flame.
• Do not smoke near this generator.
• Always operate this generator on a firm, level surface.
Gasoline is highly flammable and explosive. Handling fuel can result in serious injury or burns.
• Always shut down this generator before refueling. Refuel in a well-ventilated area. Keep heat, sparks and flame away while refueling and away from the location where gasoline is stored. Never refuel indoors where gasoline fumes may reach flames and/or sparks.
• Allow this generator to cool for at least 2 minutes before removing the fuel tank cap. Loosen the cap slowly to relieve pressure in the fuel tank. Avoid spilling fuel.
• Do not fill the fuel tank above the upper limit line. Gasoline may expand during operation. Do not fill to the top of the tank.
• Always check for spilled gasoline and immediately wipe it up before starting this generator.
• Empty the fuel tank before storing or transporting this generator.
• Always handle fuel outdoors.
• Before transporting, turn the fuel valve to the “OFF” position and disconnect the spark plug.

⚠ DANGER

Powerful Voltage: This generator produces powerful voltage, which can result in electrocution.

• ALWAYS ground this generator before using it. (See “Ground the Generator” section in this manual).

• Only electrical devices should be plugged into this generator, either directly or with an extension cord. NEVER connect a building electrical system to this generator without a qualified electrician. Such connections must isolate generator power from utility power and comply with local electrical laws and codes. Failure to comply can create a back feed into utility lines creating an electrocution hazard, which may result in serious injury or death to utility workers. Such a back feed may cause this generator to explode, burn and create fires when utility power is restored.

• Use a ground fault circuit interrupter (GFCI) in highly conductive areas such as metal decking or steel work. GFCIs are available in-line with some extension cords.

• Do not use this generator in wet conditions (rain, snow, active sprinkler system, wet hands, etc.). Always keep this generator dry and operate it with dry hands.

• Do not touch bare wires or outlets (receptacles).

• Do not allow children or non-qualified persons to operate this generator.

⚠ DANGER

High Temperatures: This generator produces heat when in operation. Temperatures near the exhaust can exceed 150 Degrees Fahrenheit (65 Degrees Celsius).

• Do not touch hot surfaces. Observe all warning placards on this generator denoting hot surfaces.

• Allow this generator to cool for several minutes after use before touching the engine, muffler or other areas that are hot during operation and before storing indoors.

• Hot exhaust may ignite some materials. Keep flammable materials away from this generator.

• Keep at least several feet of clearance on all sides of this generator during operation. Do not enclose this generator in any structure.

⚠ CAUTION

Usage: Misuse of this generator can damage it or shorten its life.

• Use this generator only for its intended purpose.

• Operate this generator only on a dry, level surface. Do not secure the generator with a chain or rope, which would prevent it from being moved in an emergency.

• Allow this generator to run for several minutes before connecting any electrical devices.

• Promptly turn off any malfunctioning devices and disconnect them.

• Do not operate an excessive number of electrical devices in excess of the wattage capacity of this generator.

• Do not turn on electrical devices until *after* they are connected to this generator.

• Turn off all connected electrical devices before stopping this generator.

⚠ WARNING

The engine exhaust from this product contains chemicals known to the State of California to cause cancer, birth defects or other reproductive harm.

⚠ DANGER

EXHAUST CONTAINS POISONOUS CARBON MONOXIDE GAS THAT CAN BUILD UP TO DANGEROUS LEVELS IN CLOSED AREAS. BREATHING CARBON MONOXIDE CAN CAUSE UNCONSCIOUSNESS OR DEATH. Never run the generator in a closed or even partly closed area where people may be present.

⚠ WARNING

GASOLINE IS HIGHLY FLAMMABLE AND EXPLOSIVE. YOU COULD BE BURNED OR SERIOUSLY INJURED IF THE GASOLINE IS IGNITED. Before refueling, stop the engine and keep heat, sparks and flame away. Handle fuel only outdoors. Do not fill the fuel tank above the upper limit line. Wipe up spills immediately.

⚠ WARNING

IMPROPER CONNECTIONS TO A BUILDING CAN ALLOW ELECTRICAL CURRENT TO BACKFEED INTO UTILITY LINES, CREATING AN ELECTROCUTION HAZARD. Connections to a building must isolate generator power from utility power and comply with all applicable laws and electrical codes.

In addition to the previously described safety information, familiarize yourself with all safety and hazard placards on this generator.

⚠ DANGER POISONOUS GAS

Generator exhaust contains toxic carbon monoxide gas. Breathing exhaust can cause loss of consciousness and shortness of breath. NEVER operate generator in poorly ventilated areas.

⚠ WARNING

Risk of electric shock. Do not remove cover. No user serviceable parts inside. Refer servicing to qualified service personnel.

⚠ WARNING! RISK OF ELECTRIC SHOCK

This generator produces high voltage.
Always ground properly before use.
Do not connect to any building electrical system.
Never use in rainy or wet conditions.
Never touch bare wires or receptacles.
Never allow children or non-qualified person to operate.

⚠ CAUTION! HOT EXHAUST

DO NOT TOUCH

CAUTION!
HIGH TEMPERATURE
DO NOT TOUCH

⚠ DANGER

Using a generator indoors CAN KILL YOU IN MINUTES.

Generator exhaust contains carbon monoxide. This is a poison you cannot see or smell.

NEVER use inside a home or garage. EVEN IF doors and windows are open.

Only use OUTSIDE and far away from windows, doors, and vents.

PACKAGE CONTENTS

The following items are supplied with this Model GEN154A 2000 Surge Watts / 1200 Running Watts Portable Generator. Verify that all items are included.

STOP!

If there are missing items, **call** 1-866-460-9436, **Monday - Friday**, 8 AM - 4 PM **Central Time** for customer service. DO NOT RETURN THIS GENERATOR TO THE RETAILER.

Item List:	
	NEMA L14-30 plug for connecting 120 Volt electrical devices
	Set of 2 DC connector wires for connecting 12 Volt automotive-type batteries
	Spark plug wrench

GENERATOR COMPONENTS

Observe the locations and functions of the various components and controls of this generator.

1) Fuel Tank Cap
2) Control Panel
3) Grounding Terminal
4) Oil Access
5) Recoil Starter
6) Carburetor Choke Lever
7) Fuel Cock
8) Power On/Off
9) AC Outlets
10) 12 Volt DC Outlet

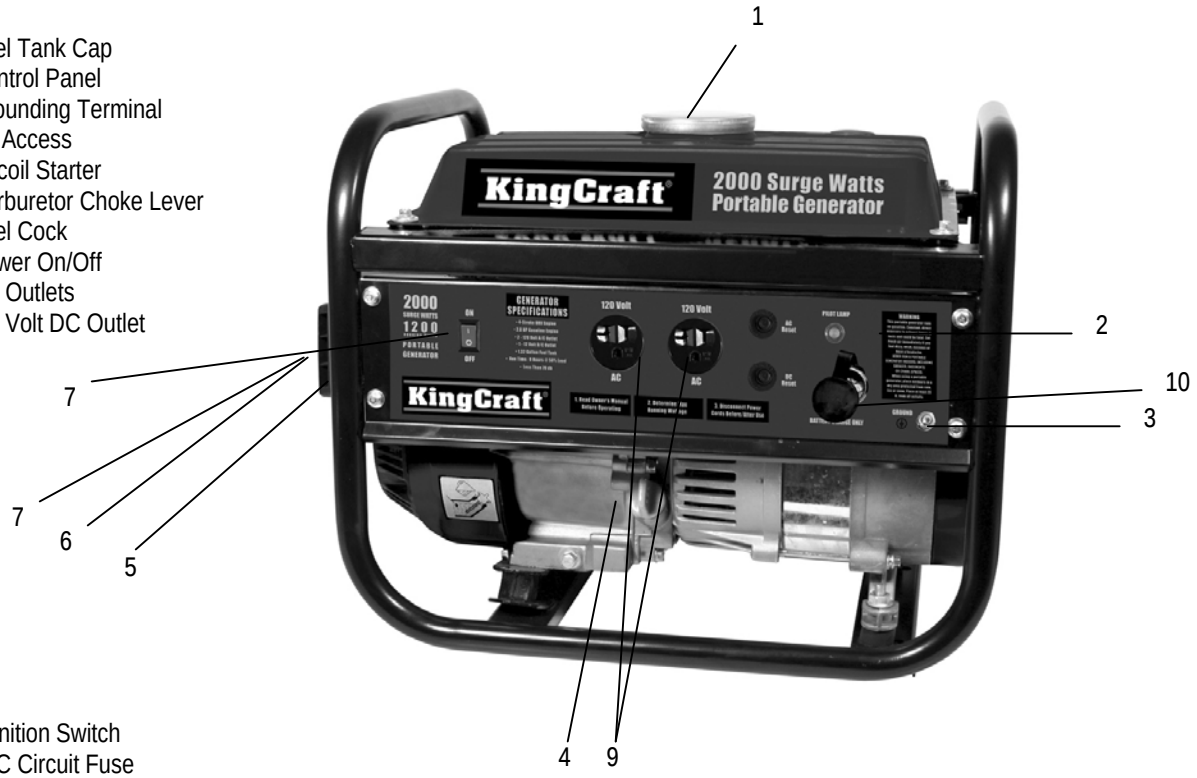

8) Ignition Switch
9) DC Circuit Fuse
10) AC Circuit Fuse
11) 120 Volt AC Output Socket
12) 12 Volt DC Output Socket
13) Pilot Lamp

PREPARING THE GENERATOR FOR USE

Using this Generator for the First-Time

STOP! **CAUTION**

The following section describes the required steps for preparing this generator for the first use. Failure to correctly perform these steps can damage this generator and/or shorten its life. If still unsure about how to perform any of these steps after reading this section, call 1-866-460-9436 Monday - Friday, 8 AM - 4 PM Central Time for customer service.

If this generator is being used for the first time, the following few steps are required to prepare it for operation:

Step 1 - Add Oil

This generator requires engine oil to function. Engine oil is a major factor affecting engine performance and service life. When new from the package, this generator contains no oil in the engine crankcase. The correct quantity of oil is equal to the oil capacity of the engine crankcase and is 13.5 fluid oz (0.40 L) for this Model GEN154A 2000 Surge Watts / 1200 Running Watts Portable Generator. Add the correct quantity of oil before operating this generator for the first time. When replenishing oil for subsequent use of this generator, always determine that this generator has the correct quantity of oil.

Model GEN154A Oil Capacity (fluid oz./L)	13.5 / 0.4
Model GEN154A Oil Type Recommended	SAE10W-30

To add oil:

1. Confirm that this generator is on a level surface.

2. Open the Oil Access Panel as illustrated in Figure 1.

3. Using a funnel, add high detergent motor oil to fill the engine crankcase to the correct quantity as stated above. SAE10W-30 oil is recommended.

When the engine crankcase is full, the oil level should reach the lower lip of the oil filling opening as illustrated in Figure 2.

4. Replace the oil filler/dipstick cap and close the oil access panel.

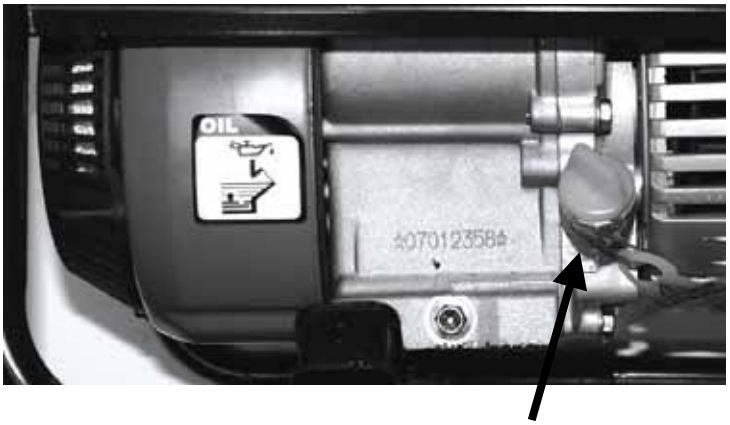

Figure 1 – Open the Oil Access Panel

Figure 2 - Adding Oil

Step 2 - Add Gasoline

⚠ WARNING

Gasoline and gasoline fumes are highly flammable and explosive. Handling fuel can result in serious injury or burns.
• Do not fill the fuel tank near a heat, sparks or an open flame. Keep gasoline away from appliance pilot lights, barbecues, electric appliances, power tools, etc.
• Do not overfill the fuel tank. Always check for fuel spills and immediately wipe them up. Spilled fuel is a fire hazard and causes environmental damage.

To add gasoline:
To ensure that this generator runs smoothly, use only FRESH, UNLEADED GASOLINE WITH AN OCTANE RATING OF 87 OR HIGHER. Unleaded gasoline produces fewer engine and spark plug deposits and extends the life of the exhaust system.

1. Confirm that this generator is on a level surface.

2. Unscrew fuel tank cap and set aside. (NOTE: The fuel tank cap may be tight and difficult to unscrew.)

3. Slowly add fresh, unleaded gasoline (with an octane rating 87 or higher) to the fuel tank. Be careful not to fill the fuel tank above the upper limit line. The fuel tank capacity for this generator is 1.8 gallon (7 L). NOTE: Because gasoline can expand, do not fill the fuel tank to the very top.

4. Securely tighten the fuel tank cap and immediately wipe up any spilled gasoline with a dry cloth.

Model GEN154A Fuel Tank Capacity (gals /L)	1.8 / 7
Model GEN154A Fuel Type	Fresh, Unleaded Gasoline Octane Rating 87 or Higher

IMPORTANT:
• Use only UNLEADED gasoline with an octane rating of 87 or higher.
• Never use a mixture of oil and gasoline.
• Never use old and/or contaminated gasoline.
• Avoid getting dirt and/or water in the fuel tank.
• Gasoline can age in the fuel tank and make it difficult to start this generator. Never store this generator for extended time with gasoline in the fuel tank.

Step 3 - Ground the Generator

⚠ WARNING

Failure to properly ground this generator can result in electrocution.

Ground this generator by tightening the grounding nut against a grounding wire as illustrated in Figure 3. A No. 12 AWG (American Wire Gauge) stranded copper wire is generally an acceptable grounding wire. The other end of this grounding wire should be connected to a copper or brass grounding rod that is driven into the earth.

Grounding codes can vary by location. Contact a local electrician for information on grounding regulations for your area.

Figure 3
The Grounding Terminal is located on the front of the generator, to the right of the DC Output socket.

Subsequent Use of this Generator

For subsequent uses of this generator after the first use, certain steps still must be completed to prepare it for operation.

IMPORTANT: Be familiar with the procedures described in the previous section titled "Using the Generator for the First Time" of this manual. If not, review this section now.

Step 1 - Verify Oil Level

It is important to check the oil level in the engine crankcase before each use to ensure that there is sufficient quantity.

1. Verify that this generator is on a level surface.

2. Unscrew the oil filler/dipstick cap from the engine.

3. With a dry cloth, wipe the oil off of the dipstick that is located on the inside of the cap.

4. Fully insert the dipstick without screwing the filler/dipstick cap and then remove again. There should be oil on the dipstick. If there is no oil on the dipstick, or oil is visible only at the very end of the dipstick, add oil until the engine crankcase is filled. (See "Changing/Adding Oil" in the "Maintenance/Care" section of this manual).

5. Confirm that the oil filler/dipstick cap is properly screwed in place when finished verifying the oil level.

Step 2 - Verify Gas Level

Before starting this generator, verify that there is sufficient gasoline in the fuel tank. The fuel gauge, located on the top of this generator, indicates the gas level currently in the fuel tank. If necessary, add fresh unleaded gasoline with an octane rating of 87 or higher according to "Step 2 - Add Gasoline" of the "Using this Generator for the First Time" section of this manual.

Model GEN154A Fuel Tank Capacity (gals /L)	1.8 / 7
Model GEN154A Fuel Type	Fresh, Unleaded Gasoline Octane Rating 87 or Higher

⚠ WARNING

Gasoline and gasoline fumes are highly flammable and explosive. Handling fuel can result in serious injury or burns.
• Do not fill the fuel tank near a heat, sparks or an open flame. Keep gasoline away from appliance pilot lights, barbecues, electric appliances, power tools, etc.
• Always allow several minutes for the engine to cool before refueling.
• Do not overfill the fuel tank. Always check for fuel spills and immediately wipe them up. Spilled fuel is a fire hazard and causes environmental damage.

IMPORTANT:
• Use only fresh UNLEADED gasoline with an octane rating of 87 or higher.
• Never use old and/or contaminated gasoline.
• Never use a mixture of oil and gasoline.
• Avoid getting dirt and/or water in the fuel tank.
• Never store generator for extended time with gasoline in the fuel tank.

Step 3 - Ground the Generator

⚠ WARNING

Failure to properly ground this generator can result in electrocution.

Ground this generator by tightening the grounding nut against a grounding wire as previously illustrated in Figure 3. A generally acceptable grounding wire is a No. 12 AWG (American Wire Gauge) stranded copper wire. The other end of this grounding wire should be connected to a copper or brass grounding rod that is driven into the earth.

Grounding codes can vary by location. Contact a local electrician for information on grounding regulations for your area.

STARTING THE GENERATOR

STOP!

Before starting this generator, confirm that all the steps in the section titled, "Preparing the Generator for Use," of this manual have been correctly completed. If unsure about how to perform any of these steps, call 1-866-460-9436, Monday - Friday, 8 AM - 4 PM Central Time for customer service.

⚠ CAUTION

Disconnect all electrical loads from this generator before attempting to start.

To start this generator:

1. Confirm that there are no electrical devices connected to this generator. Connected devices may increase the difficulty in starting the engine.
2. Confirm that this generator is properly grounded. (See "Ground the Generator" section of this manual.)
3. Turn the fuel valve to the "on" position.
4. Move the choke lever to the "closed" position.
5. Set the engine switch to the "on" position.
6. Slowly pull on the recoil starter handle, shown in Figure 4, until a slight resistance is felt. Then pull briskly to start the engine. Gently return the cord into the generator to avoid damage to the starter or housing. Never allow the cord to snap back.
7. If the engine fails to start, repeat step 6. NOTE: After repeated attempts to start the engine, consult the troubleshooting guide before attempting again. If problems persist, call 1-866-460-9436, Monday - Friday, 8 AM - 4 PM Central Time.
8. Once the engine has started and runs for about a minute, move the choke lever approximately half way towards the "open" position. Wait an additional 30 seconds and then move the choke lever completely over to the "open" position.
9. Allow this generator to run for several minutes before connecting any electrical devices.

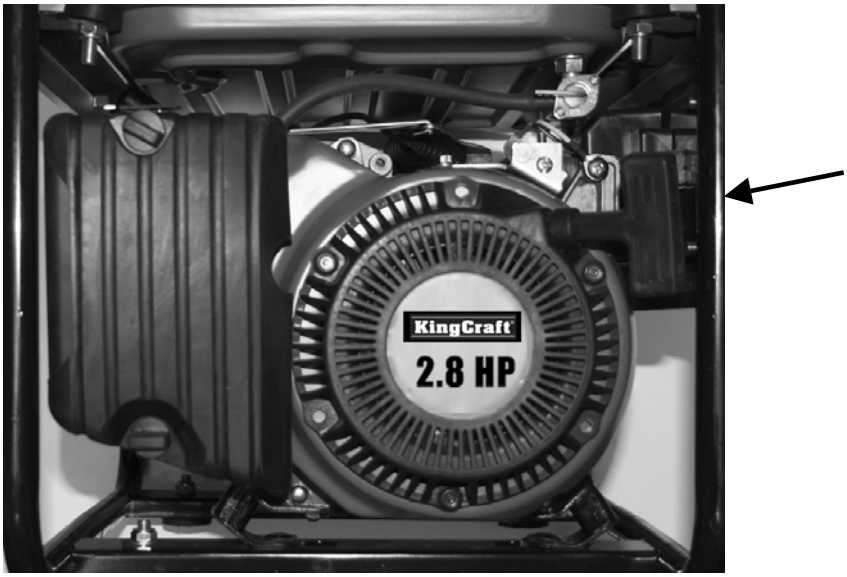

Figure 4
The Recoil Start is located on the left side of the generator.

USING THE GENERATOR

⚠ WARNING

• USE THIS GENERATOR ONLY OUTDOORS IN NON-CONFINED AREAS. DO NOT SECURE THE GENERATOR WITH A CHAIN OR ROPE, AS THIS WILL MAKE IT DIFFICULT TO MOVE IN AN EMERGENCY.
• Keep at least several feet of clearance on all sides to allow proper ventilation for this generator.

After the engine has been running for several minutes, electrical devices may be connected to this generator.

AC Usage

Electrical devices running on AC current may be connected according to their wattage requirements. The rated (running) and surge wattage for this Model GEN154A 2000 Surge Watts / 1200 Running Watts Portable Generator is 1,200 and 2,000 respectively.

Model GEN154A Rated (Running) Wattage	1200
Model GEN154A Surge Wattage	2000

The *rated (running) wattage* corresponds to the maximum wattage a generator can output on a continuous basis.

The *surge wattage* corresponds to the maximum amount of power a generator can output for a short time. Many electrical devices, such as a refrigerator, require short bursts of extra power for starting and stopping fan motors, etc., in addition to their listed rated wattage. Motorized devices typically require more than their rated wattage for startup. The surge wattage ability of a generator allows for this extra power requirement.

The total running wattage requirement of the electrical devices connected to a generator should not exceed the rated wattage of the generator itself. To calculate the total wattage requirement of the electrical devices to be connected, look up the rated (running) wattage of each device and add these numbers together to find the total wattage that all of the devices together will draw from the generator. If the total wattage of the selected devices exceeds the rated wattage of the generator, DO NOT connect all of the devices. Select a combination of the electrical devices that will have a total wattage less than or equal to the rated wattage for the generator.

⚠ CAUTION

This generator can run at its surge wattage capacity for only a short time. Connect electrical devices requiring a rated (running) wattage equal to or less than the rated wattage of this generator. Never connect devices requiring a rated wattage equal to the surge wattage of a generator.

A device's rated (running) wattage should be listed somewhere on the device itself and/or in its manual. If the wattage specification for a device is not available, the wattage can be calculated by multiplying the Voltage requirement (120 or 240) by the Amperage drawn.

Watts = Volts x Amperes

Or, the wattage required by a device can be estimated by using the following chart. The chart provides only estimates and it is better to know the exact wattage of each electrical device to be powered by this generator.

Electrical Device	Rated (Running) Watts	Additional Surge Watts
air compressor (1 - 1/2 HP)	2500	2500
airless sprayer (1/3 HP)	600	1200
coffee maker	1500	0
computer w/17 inch monitor	800	0
deep freezer	500	500
electric drill (1/2 HP)	1000	1000
furnace fan blower (1/2 HP)	800	1300
hot plate	2500	0
microwave oven (1000 watt)	1000	0
quartz halogen work light	1000	0
refrigerator/freezer (18 Cu. Ft.)	800	1600
saw - circular (7 1/4 inch)	1500	1500
stereo receiver	450	0
electric stove - single element	1500	0
sump pump	800	1200
television (27 inch color)	500	0
well water pump (1/3 HP)	1000	2000
window air conditioner (10000 BTU)	1200	1800
window fan	300	600

Connect electrical devices to this generator according to the following procedure:

Allow the engine to run for several minutes after it has been started.

Confirm that the electrical device is switched off prior to plugging it into this generator.

⚠ CAUTION

Connect only electrical devices that are in good working order. Faulty devices or power cords present the risk of electrical shock. Immediately turn off and disconnect any device that commences to operate abnormally, sluggish or abruptly stops. Determine if the problem was the device or the rated load capacity of this generator has been exceeded.

NOTE: Plug appliances into the correct outlet. Connect standard 120 Volt, single phase, 60 Hz loads to the 120 Volt outlet. Connect 12 Volt, DC loads to the 12 Volt outlet.

⚠ CAUTION

Even though this generator has an overall rated wattage of 2000, do not attempt to draw more than 1200 Watts from the 120 Volt outlet. Draws higher than 1200 Watts will damage this generator and void the warranty.

NOTE: While this generator is running, power is available from either the standard 120 Volt outlet or the 12 Volt DC outlet. Both 120 Volts and 12 Volts can be simultaneously drawn from this generator.

Turn on the connected electrical devices beginning with the device with the highest rated wattage requirement and then each additional device with the next lower rated wattage requirement.

⚠ CAUTION

Do not connect 50Hz or 3-phase loads to this generator.

SOME NOTES ABOUT POWER CORDS

Long or thin cords can require more wattage from a generator to power an electrical device. Figure 6 shows the recommended cords according to the power requirement of the electrical device. When using cords that exceed these specifications, allow for the electrical device to have a slightly higher rated wattage requirement.

Device Requirements			Max. Cord Length (ft) by Wire Gauge				
Amps	Watts (120V)	Watts (240V)	#8 wire	#10 wire	#12 wire	#14 wire	#16 wire
2.5	300	600	NR	1000	600	375	250
5	600	1200	NR	500	300	200	125
7.5	900	1800	NR	350	200	125	100
10	1200	2400	NR	250	150	100	50
15	1800	3600	NR	150	100	65	NR
20	2400	4800	175	125	75	50	NR
25	3000	6000	150	100	60	NR	NR
30	3600	7200	125	65	NR	NR	NR
40	4800	9600	90	NR	NR	NR	NR

NR = Not Recommended.

Figure 6 - Maximum Extension Cord Lengths by Power Requirement

DC Usage

⚠ CAUTION

The DC outlet is only for recharging 12 Volt automotive-type batteries. Do not connect any other device to this outlet.

⚠ CAUTION

Use this generator only for recharging 12 Volt batteries. NEVER attempt to jumpstart a car with this generator.

⚠ DANGER

Failing to use the correct procedure can cause a battery to explode, seriously injuring anyone nearby. Keep heat, sparks, flame and smoking materials away from the battery.

To connect 12 Volt batteries to the DC outlet:

1. Connect one charging wire to the positive terminal of the battery and the other charging wire to the negative terminal of the battery.
2. Connect the free end of the positive wire to the positive side of the outlet on this generator.
3. Start this generator.
4. Carefully connect the free end of the negative wire to the negative side of the outlet on this generator.
5. When disconnecting, always disconnect the wires from this generator first to avoid a spark.

⚠ DANGER

Storage batteries emit highly explosive hydrogen gas when charged.
Batteries also contain acid, which can cause severe chemical burns.

- Do not allow open flames or cigarettes nearby for several minutes after charging a battery.
- Always wear protective goggles and rubber gloves when charging a battery.
    - If battery acid gets on the skin, flush with water.
    - If battery acid gets in the eyes, flush with water and immediately call a physician.
    - If battery acid is swallowed, drink large quantities of milk and immediately call a physician.

⚠ DANGER

Do not secure the generator with a chain or rope, which would prevent it from being moved in an emergency.

STOPPING THE GENERATOR

To stop this generator:

1. Turn off all connected electrical devices and then unplug them.
2. Switch the circuit breaker to the “OFF” position.
3. Allow this generator to run for several more minutes with no electrical devices connected to help stabilize the temperature of this generator.
4. Set the engine switch to the “OFF” position.
5. Turn the fuel valve to the “OFF” position.

⚠ WARNING

Allow this generator to cool down before touching areas that become hot during operation.

⚠ CAUTION

Allowing gasoline to sit in this generator's fuel tank for extended time without use can increase the difficulty in starting this generator in the future. Never store this generator for extended time with gasoline in the fuel tank.

MAINTENANCE/CARE

Proper routine maintenance of this generator is essential for safe, economical, and trouble-free operation. It will help prolong the life of this generator as well as help reduce air pollution. Perform maintenance checks and procedures according to the schedule in Figure 7.

⚠ CAUTION

Never perform maintenance procedures while this generator is running. Allow this generator to cool before commencing any maintenance procedures. Keep heat, sparks and flame away.

⚠ WARNING

Improper maintenance and/or failure to correct any problems prior to operating this generator can cause a malfunction which could cause death or serious injury. Always follow the inspection and maintenance recommendations and schedules in this manual.

Recommended Maintenance Schedule

		Each Use	Every Month or Each 20 Hrs	Every 3 Months or Each 50 Hrs	Every 6 Months or Each 100 Hrs	Every Year or Each 300 Hrs
Engine Oil	Check Level	X				
	Replace		X			
Air Filter	Check	X				
	Clean			X		
Fuel Filler Cap	Clean				X	
Spark Plug	Check/Clean				X	
Fuel Tank	Verify Gas Level	X				
	Clean					X

Figure 7 - Recommended maintenance schedule

Cleaning the Generator

Always try to use this generator in a cool dry place. If this generator becomes dirty, the exterior can be cleaned with a damp cloth, soft brush, vacuum and/or pressurized air.

Never clean this generator with a bucket of water and/or a hose as water can get inside and cause a short circuit or corrosion.

Never use gasoline to clean parts of this generator.

Checking the Oil Level

It is important to check the oil level in the engine crankcase before each use to ensure that there is a sufficient quantity.

To check the oil level:

1. Verify that this generator is shut down and on a level surface.
2. Unscrew the oil filler/dipstick cap from the engine.
3. With a dry cloth, wipe the oil off of the dipstick that is located on the inside of the cap.
4. Insert the dipstick as if replacing the cap and then remove again. There should be oil on the dipstick. If there is no oil on the dipstick, or oil is visible only at the very end of the dipstick, add oil until the engine crankcase is filled.
5. Confirm that the oil filler/dipstick cap is properly in place when finished verifying the oil level.

Changing/Adding Oil

The oil level in this generator should be checked before each use. (See Figure 9.) When the oil level is low, add oil until the level is sufficient to operate this generator.

The oil capacity for this Model GEN154A 2000 Surge Watts / 1200 Running Watts Portable Generator engine is 13.5 fluid oz. (0.40 L).

To drain the oil from this generator:
It is necessary to drain the oil from the crankcase only if it has become contaminated with water and/or dirt.

1. Place a bucket underneath this generator to catch oil as it drains.
2. Unscrew the oil drain plug located on the crankcase underneath the oil filler/dipstick cap.
3. Allow all the oil to drain from this generator.
4. Replace the oil drain plug and tighten.

NOTE: Never dispose of used motor oil in the trash, down a drain or on the ground. Put oil in a sealed container and contact your local recycling center or auto garage to arrange oil disposal.

To add oil to the engine crankcase:

1. Confirm that this generator is on a level surface.
2. Unscrew the oil filler/dipstick cap from the engine as illustrated in Figure 8 below.
3. Using a funnel, add high detergent motor oil to fill the engine crankcase to the correct quantity. SAE10W-30 oil is recommended for general use.

When the engine crankcase is full, the oil level should reach the lower lip of the oil filling opening as shown in Figure 8.

Oil Capacity (fluid oz./L)	13.5 / 0.40
Oil Type Recommended	High Detergent Motor Oil, SAE10W-30

Figure 8 – Adding oil

Air Filter Maintenance

Routine maintenance of the air filter helps maintain proper airflow to the carburetor. Occasionally verify that the air filter is free of excessive dirt. The air filter will require more frequent cleaning when operating this generator in extremely dusty areas.

To clean air filter, remove from generator. Wash in kerosene. Pour motor oil on filter, squeeze out excess oil and reinstall in the generator.

Spark Plug Maintenance

The spark plug is essential for proper engine operation. The spark plug should be intact, free of deposits, and properly gapped. A bad or incorrectly installed spark plug can cause engine damage.

To inspect the spark plug:

1. Remove the spark plug by pulling on the spark plug cap.
2. Unscrew the spark plug from this generator by using the included spark plug wrench.
3. Visually inspect the spark plug. If it is cracked and/or chipped, discard and install a new spark plug. A F6TC spark plug, such as NGK BPR5ES, is recommended.
4. Measure the spark plug electrode gap with a gauge. The gap should be 0.028-0.031in (0.7-0.8mm). (See Figure 9.)
5. If re-using the spark plug, use a wire brush to clean any dirt from around the spark plug base and then re-gap the spark plug.
6. Screw the spark plug back into place on this generator by using the included spark plug wrench.
7. Replace the spark plug cap.

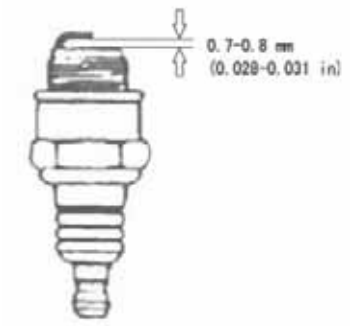

Figure 9 - Measuring the spark plug gap

Emptying the Fuel Tank

To store this generator for extended time, drain the gasoline from the fuel tank.
To drain gasoline from this generator:

1. Turn the fuel valve to the “off” position.
2. Remove the fuel filter cup.
3. Empty the fuel filter cup of any fuel.
4. Place a receptacle underneath this generator to catch gasoline as it drains.
5. Turn the fuel valve to the “on” position and allow all gasoline to drain.
6. Turn the fuel valve to the “off” position.
7. Replace the fuel filter cup.
8. Store the drained gasoline in a suitable place.

⚠ CAUTION

Do not store gasoline for more than 3 months.

STORAGE/TRANSPORT PROCEDURES

⚠ CAUTION

Never place any type of storage cover on this generator while it is still hot.

When transporting or storing this generator for extended time:
- Allow generator to fully cool before moving it. A hot engine and exhaust system can burn you and ignite some materials.
- Empty the fuel tank. (See “Emptying the Fuel Tank” in the “Maintenance/Care” section.)
- Turn the fuel valve to the “off” position.
- Disconnect the spark plug.
- Do not obstruct any ventilation openings.
- Do not drop or strike this generator while moving it.
- Store this generator in a cool dry area, free of excessive dust.

Storage Time	Recommended Storage Procedure (which will help prevent difficult starts)
Less than 1 month	No storage procedure required.
1 to 2 months	Fill with fresh gasoline and add gasoline conditioner
2 months to 1 year	Empty the fuel tank. (See “Emptying the Fuel Tank” in the “Maintenance/Care” section.)
1 year or more	Empty the fuel tank. (See “Emptying the Fuel Tank” in the “Maintenance/Care” section.) Disconnect the spark plug.

TROUBLESHOOTING

IMPORTANT: If trouble persists, call our customer help line at 1-866-460-9436, Monday - Friday, 8 AM - 4 PM Central Time.

Symptom	Cause	Solution
Engine will not start.	Engine switch is set to "off."	Set engine switch to "on."
	Fuel valve is turned to "closed."	Turn fuel valve to "open."
	Choke is open.	Close the choke.
	Engine is out of gasoline.	Add gasoline.
	Engine is filled with contaminated and/or old gasoline.	Drain gasoline from the engine and add new gasoline.
	Spark plug is dirty.	Clean spark plug.
	Spark plug is broken.	Replace spark plug.
	Oil is low.	Add or replace oil.
	Circuit breaker is off.	Flip circuit breaker to "on."
Engine runs but there is no electrical output.	Reset button is "off."	Push reset button to "on."
	Bad connecting wires/cables.	Try a different extension cord.
	Bad electrical device connected to generator.	Disconnect device, try connecting another device.
	Generator is overloaded.	Reduce draw on generator to within this generator's rated wattage by reducing number of connected electrical devices.
Generator runs but does not support all connected electrical devices.	Short in one of the connected devices.	Disconnect any faulty or short-circuited electrical loads.
	Air filter is dirty.	Clean or replace air filter.

GEN154A 2000 SURGE WATTS / 1200 RUNNING WATTS PORTABLE GENERATOR PARTS DIAGRAM

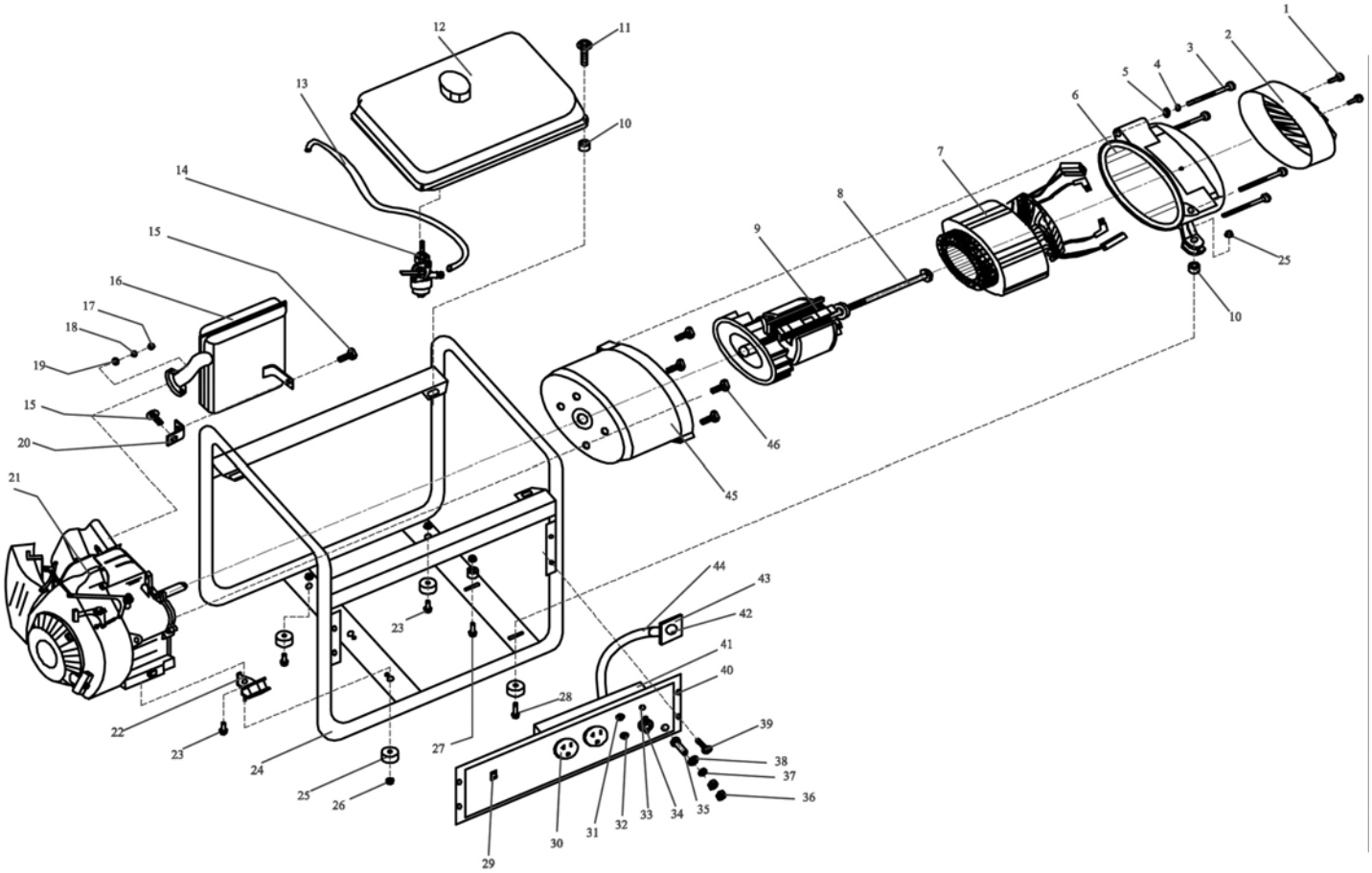

GEN154A 2000 SURGE WATTS / 1200 RUNNING WATTS PORTABLE GENERATOR PARTS LIST

NO.	PART NAME	PART NO.	QTY
1	Bolt	GB5780 M5*10	2
2	Cover		1
3	Bolt	GB5780 M5*30	4
4	Spring Washer	GB93 6	4
5	Washer	GB95 6	4
6	Rear Cover		1
7	Stator		1
8	Bolt	GB5789 M8*170	1
9	Rotor		1
10	Fuel Tank Cushion	G003A-12-2	6
11	Bolt	GB5789 M6*20	4
12	Fuel Tank Assy	G003A-12-01	1
13	Fuel Pipe	LSSCYG4X8	0.2m
14	Fuel Cock	G003A-12-04	1
15	Bolt	GB5789 M6*10	2
16	Muffler	G003A-07-01	1
17	Nut	GB6170M8	2
18	Spring Washer	GB93 8	2
19	Washer	GB95 8	2
20	Fixed Talon		1
21	Engine Assembly	A154F	1
22	Cushion	G003A-00-02	2
23	Bolt	GB5789 M8*16	4
24	Frame	C1000-2041100A1	1
25	Cushion	WP80-02-01	4
26	Nut	GB6177.1 M8	6
27	Bolt	GB5789 M8*35	1
28	Bolt	GB5789 M8*40	1
29	Ignition Switch	G003A-11-03	1
30	Socket(AC)	G003A-11-04	2
31	Circuit Protector (AC)	G003A-11-05	1
32	Circuit Protector (DC)	G020H-11-07	1
33	Pilot Lamp	G003A-11-07	1
34	Cigarette Lighter	G003A-11-08	1
35	Bolt	GB5783 M6*16	1
36	Nut	GB6170 M6	2
37	Spring Washer	GB93 6	1
38	Washer	GB95 6	1
39	Bolt	GB818 M6*8	5
40	Control Panel	G003A-11-02G	1
41	Control Panel Cover	G003A-11-2G	1
42	Harness Assembly	G003A-11-01G	1
43	Rubber Boot	G003A-11-2G	1
44	Bellows	G003A-11-3	1
45	Front Cover		1
46	Bolt	GB5789 M8*20	4

GEN154A0912